EVALUATION REPORT

FLORIDA BUILDING CODE, 8TH EDITION (2023)

Issued August 19, 2027

Manufacturer: SIPLAST, INC.
1111 Hwy 67 South
Arkadelphia, AR 71923
(800) 643-7591
www.siplast.com

Manufacturing Plants: Mt. Vernon, IN
Gainesville, TX
Cedar City, UT
New Columbia, PA

Quality Assurance: UL LLC (QUA9625)

SCOPE

Category: Roofing
Subcategory: Single Ply Roof System
Code Edition: Florida Building Code, 8th Edition (2023) including High-Velocity Hurricane Zones (HVHZ)
Code Sections: 1504.3.1, 1504.6, 1504.7, 1507.12, 1515.1.1 , 1515.1.4, 1515.2.4, 1523.1.1, 1523.6.2
Properties: Wind Resistance, Impact Resistance, Physical Properties

PRODUCT DESCRIPTION

Products	Specification	Description
Parasolo PVC Smooth (Cedar City, UT)	ASTM D 4434 Type III	50-mil, 60-mil, or 80-mil thick thermoplastic PVC, heat-weldable, single-ply roof membrane with polyester weft-inserted reinforcement
Parasolo PVC FB (Cedar City, UT)	ASTM D 4434 Type III	50-mil, 60-mil, or 80-mil thick thermoplastic PVC, heat-weldable, single-ply roof membrane with polyester weft-inserted reinforcement and 3.5oz/yd^2 non-woven polyester fleece backing
Parasolo PVC KEE Smooth (Cedar City, UT)	ASTM D 4434 Type III	50-mil, 60-mil, or 80-mil thick thermoplastic PVC KEE, heat-weldable, single-ply roof membrane with polyester weft-inserted reinforcement
Parasolo PVC KEE FB (Cedar City, UT)	ASTM D 4434 Type III	50-mil, 60-mil, or 80-mil thick thermoplastic PVC KEE, heat-weldable, single-ply roof membrane with polyester weft-inserted reinforcement and 3.5oz/yd^2 non-woven polyester fleece backing
Parasolo TPX Membrane (Mt Vernon, IN; Gainsville, TX; Cedar City, UT; New Columbia, PA)	ASTM D 6878 TAS 110	50-mil, 60-mil, 70-mil or 80-mil thick thermoplastic polyolefin, heat-weldable, single-ply roof membrane with polyester weft-inserted reinforcement
Parasolo TPX Fleece-Back Membrane (Mount Vernon, IN)	ASTM D 6878 TAS 110	50-mil, 60-mil, 70-mil or 80-mil thick thermoplastic polyolefin, heat-weldable, single-ply roof membrane with polyester weft-inserted reinforcement and 3.5oz/yd^2 non-woven polyester fleece backing

This evaluation report is provided for State of Florida product approval under Rule 61G20-3. The manufacturer shall notify CREEK Technical Services, LLC of any product changes or quality assurance changes throughout the duration for which this report is valid. This evaluation report does not express nor imply warranty, installation, recommended use, or other product attributes that are not specifically addressed herein.

REFERENCES

Entity	Report No.	Standard (Year)	Year
Atlantic & Caribbean Roof Consulting (TST4671)	ACRC 16-002	TAS 114(J)	2011
		FM 4474(D)	2011
Atlantic & Caribbean Roof Consulting (TST4671)	ACRC 20-016	TAS 114(D)	2011
Atlantic & Caribbean Roof Consulting (TST4671)	ACRC 20-017	TAS 114(D)	2011
Atlantic & Caribbean Roof Consulting (TST4671)	ACRC 20-019	TAS 114(D)	2011
Atlantic & Caribbean Roof Consulting (TST4671)	ACRC 20-020	TAS 114(D)	2011
Atlantic & Caribbean Roof Consulting (TST4671)	ACRC 20-021	TAS 114(D)	2011
Atlantic & Caribbean Roof Consulting (TST4671)	ACRC 20-022	TAS 114(D)	2011
Atlantic & Caribbean Roof Consulting (TST4671)	ACRC 20-023	TAS 114(D)	2011
Atlantic & Caribbean Roof Consulting (TST4671)	ACRC 21-006	TAS 114(J)	2011
		FM 4474(D)	2011
Atlantic & Caribbean Roof Consulting (TST4671)	ACRC 23-012	TAS 114(D)	2011
Atlantic & Caribbean Roof Consulting (TST4671)	ACRC 23-013	TAS 114(D)	2011
Atlantic & Caribbean Roof Consulting (TST4671)	ACRC 23-014	TAS 114(D)	2011
FM Approvals (TST1867)	3019881	FM 4470	2016
FM Approvals (TST1867)	3023368	FM 4470	2016
FM Approvals (TST1867)	3036141	FM 4470	2016
FM Approvals (TST1867)	3036980	FM 4470	2016
FM Approvals (TST1867)	3038215	FM 4470	2016
FM Approvals (TST1867)	3040377	FM 4470	2016
FM Approvals (TST1867)	3041769	FM 4470	2016
FM Approvals (TST1867)	3045166	FM 4470	2016
FM Approvals (TST1867)	3046280	FM 4470	2016
FM Approvals (TST1867)	3046388	FM 4470	2016
FM Approvals (TST1867)	3047636	FM 4470	2016
FM Approvals (TST1867)	3053501	FM 4470	2016
FM Approvals (TST1867)	3055491	FM 4470	2016
FM Approvals (TST1867)	3056933	FM 4470	2016
FM Approvals (TST1867)	3060250	FM 4470	2016
FM Approvals (TST1867)	3061784	FM 4470	2016
FM Approvals (TST1867)	PR452971	FM 4470	2016
FM Approvals (TST1867)	PR453601	FM 4470	2016
FM Approvals (TST1867)	PR455417	FM 4470	2016
FM Approvals (TST1867)	PR456101	FM 4470	2016
FM Approvals (TST1867)	PR458073	FM 4470	2016
FM Approvals (TST1867)	PR458321	FM 4470	2016
FM Approvals (TST1867)	PR456101	FM 4470	2016
FM Approvals (TST1867)	3036614	FM 4470	2016
FM Approvals (TST1867)	3034749	FM 4470	2016
FM Approvals (TST1867)	3056822	FM 4470	2016
FM Approvals (TST1867)	3056933	FM 4470	2016
FM Approvals (TST1867)	PR466463	FM 4470	2016
FM Approvals (TST1867)	RR237727	FM 4470	2016
FM Approvals (TST1867)	PR460889	FM 4470	2016
FM Approvals (TST1867)	PR466037	FM 4470	2016
FM Approvals (TST1867)	PR458360	FM 4470	2016
FM Approvals (TST1867)	PR460786	FM 4470	2016
FM Approvals (TST1867)	PR455468	FM 4470	2016
FM Approvals (TST1867)	PR459436	FM 4470	2016
FM Approvals (TST1867)	PR465619	FM 4470	2016
FM Approvals (TST1867)	3044914	FM 4470	2016
FM Approvals (TST1867)	PR463035	FM 4470	2016
FM Approvals (TST1867)	PR464801	FM 4470	2016
FM Approvals (TST1867)	PR449764	FM 4470	2016
FM Approvals (TST1867)	PR463212	FM 4470	2016
FM Approvals (TST1867)	3055411	FM 4470	2016
FM Approvals (TST1867)	3056207	FM 4470	2016
FM Approvals (TST1867)	PR467712	FM 4470	2016
FM Approvals (TST1867)	RR241586	FM 4470	2016
FM Approvals (TST1867)	RR241361/RR238672	FM 4470	2016
FM Approvals (TST1867)	PR466096	FM 4470	2016
IRT-ARCON (TST5296)	02-008	TAS 114(J)	2011
NEMO ETC LLC (TSTS6049)	G40620.07.12-2-R1	ASTM D 6222/D 6222M	2016
		TAS 110	2000

This evaluation report is provided for State of Florida product approval under Rule 61G20-3. The manufacturer shall notify CREEK Technical Services, LLC of any product changes or quality assurance changes throughout the duration for which this report is valid. This evaluation report does not express nor imply warranty, installation, recommended use, or other product attributes that are not specifically addressed herein.

Entity	Report No.	Standard (Year)	Year
NEMO ETC LLC (TSTS6049)	4j-GAF-21-SSUDL-01.A-R2	Physical Properties	
NEMO ETC LLC (TSTS6049)	4q-GAF-18-001.01.19-1	ASTM D 2178/D 2178M	2015
NEMO ETC LLC (TSTS6049)	4q-GAF-18-001.03.19.A-R1	ASTM D 6222/D 6222M	2016
		TAS 110	2000
NEMO ETC LLC (TSTS6049)	4q-GAF-19-SSMBB-01.A	ASTM D 6164/D 6164M	2016
		TAS 110	2000
NEMO ETC LLC (TSTS6049)	4q-GAF-19-SSMBB-02.A	ASTM D 6163/D 6163M	2016
		TAS 110	2000
NEMO ETC LLC (TSTS6049)	4q-GAF-21-SSMBB-01.A	ASTM D 4601/D 4601M	2004(2012)E1
NEMO ETC LLC (TSTS6049)	4q-GAF-21-SSMBB-01.B	ASTM D 4897/D 4897M	2016a
NEMO ETC LLC (TSTS6049)	4j-GAF-21-SSUDL-01.A-R2	Physical Properties	
NEMO ETC LLC (TSTS6049)	4S-GAF-18-003.12.18-1	ASTM D 4434/D 4434M	2015
NEMO ETC LLC (TSTS6049)	4S-GAF-18-003.12.18-2	ASTM D 4434/D 4434M	2015
PRI Construction Materials Technologies (TST5878)	GAF-421-02-01	TAS 110	2000
		ASTM D 6878	2021
PRI Construction Materials Technologies (TST5878)	GAF-422-02-01	TAS 110	2000
		ASTM D 6878	2021
PRI Construction Materials Technologies (TST5878)	GAF-424-02-01	TAS 110	2000
		ASTM D 6878	2021
PRI Construction Materials Technologies (TST5878)	GAF-425-02-01	TAS 110	2000
		ASTM D 6878	2021
PRI Construction Materials Technologies (TST5878)	GAF-506-02-13	TAS 114(J)	2011
		FM 4474(D)	2011
PRI Construction Materials Technologies (TST5878)	GAF-584-02-01	TAS 110	2000
		ASTM D 6878	2021
PRI Construction Materials Technologies (TST5878)	GAF-585-02-01	TAS 110	2000
		ASTM D 6878	2021
PRI Construction Materials Technologies (TST5878)	GAF-586-02-01	TAS 110	2000
		ASTM D 6878	2021
PRI Construction Materials Technologies (TST5878)	GAF-700-02-01	TAS 110	2000
		ASTM D 6878	2021
PRI Construction Materials Technologies (TST5878)	GAF-776-02-02	TAS 114(J)	2011
		FM 4474(D)	2011
PRI Construction Materials Technologies (TST5878)	GAF-782-02-02	TAS 114(J)	2011
		FM 4474(D)	2011
PRI Construction Materials Technologies (TST5878)	GAF-836-02-01	TAS 114(J)	2011
		FM 4474(D)	2011
PRI Construction Materials Technologies (TST5878)	GAF-836-02-02	TAS 114(J)	2011
		FM 4474(D)	2011
PRI Construction Materials Technologies (TST5878)	GAF-836-02-03	TAS 114(J)	2011
		FM 4474(D)	2011
PRI Construction Materials Technologies (TST5878)	GAF-836-02-04	TAS 114(J)	2011
		FM 4474(D)	2011
PRI Construction Materials Technologies (TST5878)	GAF-858-02-01	TAS 114(J)	2011
		FM 4474(D)	2011
PRI Construction Materials Technologies (TST5878)	GAF-858-02-03	TAS 114(J)	2011
		FM 4474(D)	2011
PRI Construction Materials Technologies (TST5878)	GAF-858-02-04	TAS 114(J)	2011
		FM 4474(D)	2011
PRI Construction Materials Technologies (TST5878)	GAF-858-02-06	TAS 114(J)	2011
		FM 4474(D)	2011
PRI Construction Materials Technologies (TST5878)	GAF-870-02-01	TAS 110	2000
		ASTM D 6878	2021
PRI Construction Materials Technologies (TST5878)	GAF-871-02-01	TAS 110	2000
		ASTM D 6878	2021
PRI Construction Materials Technologies (TST5878)	GAF-889-02-01	TAS 110	2000
		ASTM D 6878	2021
PRI Construction Materials Technologies (TST5878)	GAF-894-02-01	TAS 110	2000
		ASTM D 6878	2021
PRI Construction Materials Technologies (TST5878)	GAF-904-02-01	TAS 110	2000
		ASTM D 6878	2021
PRI Construction Materials Technologies (TST5878)	MSA-039-02-01	ASTM D 2178/D 2178M	2015a
PRI Construction Materials Technologies (TST5878)	MSA-039-02-02	ASTM D 2178/D 2178M	2015a
PRI Construction Materials Technologies (TST5878)	376T0016	TAS 114(J) (2011);	2011
		FM 4474(D) (2011)	2011

This evaluation report is provided for State of Florida product approval under Rule 61G20-3. The manufacturer shall notify CREEK Technical Services, LLC of any product changes or quality assurance changes throughout the duration for which this report is valid. This evaluation report does not express nor imply warranty, installation, recommended use, or other product attributes that are not specifically addressed herein.

Entity	Report No.	Standard (Year)	Year
PRI Construction Materials Technologies (TST5878)	376T0017	TAS 114(J) (2011);	2011
		FM 4474(D) (2011)	2011
PRI Construction Materials Technologies (TST5878)	376T0098	TAS 114(J)	2011
		FM 4474(D)	2011
PRI Construction Materials Technologies (TST5878)	376T0099	TAS 114(J)	2011
		FM 4474(D)	2011
PRI Construction Materials Technologies (TST5878)	376T0128	TAS 110	2000
		ASTM D 6878	2021
PRI Construction Materials Technologies (TST5878)	376T0143	ASTM D 6222/D 6222M	2016
		TAS 110	2000
PRI Construction Materials Technologies (TST5878)	376T0144	ASTM D 6222/D 6222M	2016
		TAS 110	2000
PRI Construction Materials Technologies (TST5878)	376T0227	ASTM D 4897	2016a
PRI Construction Materials Technologies (TST5878)	376T0229	ASTM D 4601	2004(2012)E1
PRI Construction Materials Technologies (TST5878)	376T0275	ASTM D 2178	2015a
PRI Construction Materials Technologies (TST5878)	376T0315	ASTM D 413	
PRI Construction Materials Technologies (TST5878)	376T0399	ASTM D 413	
PRI Construction Materials Technologies (TST5878)	376T0404.3	TAS 114(J) (2011);	2011
		FM 4474(D) (2011)	2011
PRI Construction Materials Technologies (TST5878)	376T0404.4	TAS 114(J) (2011);	2011
		FM 4474(D) (2011)	2011
PRI Construction Materials Technologies (TST5878)	376T0405.2	FM 4474(D)	2011
PRI Construction Materials Technologies (TST5878)	376T0405.3	FM 4474(D)	2011
PRI Construction Materials Technologies (TST5878)	376T0461	TAS 114(J)	2011
		FM 4474(D)	2011
PRI Construction Materials Technologies (TST5878)	376T0470	TAS 114(J)	2011
		FM 4474(D)	2011
PRI Construction Materials Technologies (TST5878)	376T0488	TAS 114(J)	2011
		FM 4474(D)	2011
PRI Construction Materials Technologies (TST5878)	376T0490.2	TAS 114(J)	2011
		FM 4474(D)	2011
Trinity|ERD (TST6049)	01509.03.04-2	TAS 114(J)	2011
		FM 4470	2016
Trinity|ERD (TST6049)	01881.11.03-2-R1	TAS 114(D)	2011
Trinity|ERD (TST6049)	G40630.01.14-1	ASTM D 6163/D 6163M	2000(2016)
		TAS 110	2000
Trinity|ERD (TST6049)	G40630.01.14-2A	ASTM D 6164/D 6164M	2016
		TAS 110	2000
Trinity|ERD (TST6049)	G40630.01.14-2A-1-R1	ASTM D 6164/D 6164M	2016
		TAS 110	2000
Trinity|ERD (TST6049)	GF43180.03.14	ASTM D 6164/D 6164M	2016
		TAS 110	2000
Trinity|ERD (TST6049)	GAF-SC8580.01.16-1	TAS 114(J)	2011
		FM 4474(D)	2011
Trinity|ERD (TST6049)	GAF-SC9700.08.15-R1	ASTM D 2178/D 2178M	2015a
Trinity|ERD (TST6049)	GAF-SC13285.03.17-5	ASTM D 6164/D 6164M	2016
		TAS 110	2000
Trinity|ERD (TST6049)	GAF-SC13105-.03.17-R1	ASTM D 6164/D 6164M	2016
		TAS 110	2000

This evaluation report is provided for State of Florida product approval under Rule 61G20-3. The manufacturer shall notify CREEK Technical Services, LLC of any product changes or quality assurance changes throughout the duration for which this report is valid. This evaluation report does not express nor imply warranty, installation, recommended use, or other product attributes that are not specifically addressed herein.

LIMITATIONS

1. Fire classification is not within the scope of this evaluation.
2. Foam plastic insulation shall be separated from the building interior in accordance with the FBC 2603.4 and 2603.6.
3. The roof deck and the roof deck attachment information are provided based on testing. FBC requirements for the rational design of the roof deck, including the attachment, are not within the scope of this evaluation.
4. In the HVHZ, fastener spacing for insulation attachment is determined using a Minimum Characteristic Force (F') of 275 lbf as demonstrated via testing to TAS 105. If the field tested fastener value is below 275 lbf, then insulation attachment shall not be acceptable.
5. In the HVHZ, fastener spacing for base sheets or membrane attachment shall meet the minimum fastener resistance value and the *MDP* for the specified assembly. It is permissible for a qualified professional to submit a revised fastener spacing utilizing the withdrawal resistance value obtained from TAS 105 testing and calculations performed in accordance with RAS 117 and/or RAS 137, when the fastener resistance is found less than required.
6. In the HVHZ, if mechanical attachment through the lightweight insulating concrete to the structural deck is proposed, a field fastener withdrawal test shall be conducted in compliance with TAS 105 to determine equivalent or increased attachment densities. Revised fastener densities shall be submitted utilizing the withdrawal resistance value obtained from TAS 105 testing and calculations performed in accordance with RAS 117 and/or RAS 137.
7. **HVHZ:** For assemblies containing mechanical attachment, the allowable uplift pressure for the selected assembly shall meet or exceed the minimum design loads as determined in accordance with the FBC Chapter 16. The attachment density may be increased by a qualified design professional, as necessary, to meet the design pressure requirements in the periphery zones. Calculations shall be conducted in compliance with RAS 117 and/or RAS 137.
   Non-HVHZ: For assemblies containing mechanical attachment or adhered in ribbon-applied adhesive, the allowable uplift pressure for the selected assembly shall meet or exceed the minimum design loads as determined in accordance with the FBC Chapter 16. The attachment density may be increased by a qualified design professional, as necessary, to meet the design pressure requirements in the periphery zones. Calculations shall be conducted in compliance with RAS 117, RAS 137, or Section 2.2.10.1 FM LPDS 1-29 (July 2022).
8. Reroofing applications shall be examined in accordance with FBC Section 1511 outside of the HVHZ and FBC Section 1521 within the HVHZ. For mechanically fastened systems, a field withdrawal resistance test (TAS 105 in the HVHZ; ANSI/SPRI FX-1 or TAS 105 in the non-HVHZ) shall be conducted by a qualified professional to ensure the fastener meets the minimum design load requirements of the system. For adhered systems, a field uplift resistance test (TAS 124 in the HVHZ; ASTM E 907, FM LPDS 1-52, ANSI/SPRI IA-1, or TAS 124 in the non-HVHZ) shall be conducted to confirm conformance of the existing to the minimum design loads.
9. **HVHZ:** For assemblies containing fully adhered or ribbon adhered attachment, or where extrapolation of the assembly is not permitted, the *MDP* for the selected assembly shall meet or exceed the minimum design loads as determined in accordance with the FBC Chapter 16 without augmentation.
   Non-HVHZ: For assemblies adhered in ribbon-applied adhesive, the allowable uplift pressure for the selected assembly shall meet or exceed the minimum design loads as determined in accordance with the FBC Chapter 16. The attachment density may be increased by a qualified design professional, as necessary, to meet the design pressure requirements in the periphery zones. Calculations shall be conducted in compliance with Section 2.2.10.1 FM LPDS 1-29 (July 2022).
10. Installation of the evaluated products shall comply with this report, the FBC, and the manufacturer's published application instructions. Where discrepancies exist between these sources, the more restrictive and FBC compliant installation detail shall prevail.
11. The minimum roof slope shall be 1/4:12 for new construction.
12. All products listed in this report shall be manufactured under a quality assurance program in compliance with Rule 61G20-3.

This evaluation report is provided for State of Florida product approval under Rule 61G20-3. The manufacturer shall notify CREEK Technical Services, LLC of any product changes or quality assurance changes throughout the duration for which this report is valid. This evaluation report does not express nor imply warranty, installation, recommended use, or other product attributes that are not specifically addressed herein.

COMPLIANCE STATEMENT

This report has been prepared in accordance with F.A.C. Rule 61G20-3.

This item has been digitally signed and sealed by Zachary R. Priest, PE, on 8/19/2025.

Printed copies of this document are not considered signed and sealed and the signature must be verified on any electronic copies.

Digitally signed by Zachary R. Priest

2025.08.19 14:31:34 -04'00'

Zachary R. Priest, P.E.
Florida Registration No. 74021
Organization No. ANE9641

CERTIFICATION OF INDEPENDENCE

CREEK Technical Services, LLC does not have, nor will it acquire, a financial interest in any company manufacturing or distributing products under this evaluation.

CREEK Technical Services, LLC is not owned, operated, or controlled by any company manufacturing or distributing products under this evaluation.

Zachary R. Priest, P.E. does not have, nor will acquire, a financial interest in any company manufacturing or distributing products under this evaluation.

Zachary R. Priest, P.E. does not have, nor will acquire, a financial interest in any other entity involved in the approval process of the product.

APPENDICES

1) APPENDIX A – Installation (5 pages)
2) APPENDIX B – Nomenclature and Approved Assemblies (35 pages)

This evaluation report is provided for State of Florida product approval under Rule 61G20-3. The manufacturer shall notify CREEK Technical Services, LLC of any product changes or quality assurance changes throughout the duration for which this report is valid. This evaluation report does not express nor imply warranty, installation, recommended use, or other product attributes that are not specifically addressed herein.

INSTALLATION

Note - Refer to the APPROVED ASSEMBLIES section of this report for specific installation details of a selected assembly.

Unless otherwise specified in this report the following installation details shall be met for the named products:

Component	Product	Installation Detail
Fasteners & Plates	Drill-Tec™ 2-3/8" Barbed XHD Plate	2-3/8-inch diameter; Galvalume steel, seam plate with barbs
	Parafast XHD Barb Plate 2"	2-inch diameter; Galvalume steel, seam plate with barbs
	Drill-Tec™ 2.4" Barbed Seam Plate	2.4-inch diameter; Galvalume steel, seam plate with barbs
	Drill-Tec™ 2.4" Scoop Seam Plate	2.4-inch diameter; Galvalume steel, seam plate with scoops
	Drill-Tec™ 2-3/8" Double Barbed XHD Plate	2-3/8-inch diameter; Galvalume steel, seam plate with barbs
	Parafast SXHD Barb Plate 2-3/4"	2-3/4-inch diameter; Galvalume steel, seam plate with barbs
	Drill-Tec™ Eyehook AccuSeam® Plate	2-3/8-inch diameter; Galvalume steel, seam plate with eyehooks
	Drill-Tec™ 3" ASAP® Flat	Drill-Tec #12 Fastener and Drill-Tec 3" Standard Steel Plate
	Drill-Tec™ 3" ASAP® Recessed	Drill-Tec #12 Fastener and Drill-Tec 3" Steel Plate
	Drill-Tec™ 3" Flat Steel Plate	3-inch diameter; Galvalume steel insulation plate
	Drill-Tec™ 3" Recessed Steel Plate	3-inch diameter; Galvalume steel insulation plate; for use with Paratherm G only
	Drill-Tec™ 3" Standard Steel Plate	3-inch diameter; Galvalume steel insulation plate
	Drill-Tec™ 3" Steel Plate	3-inch diameter; Galvalume steel insulation plate
	Drill-Tec™ 3 in. Ribbed Galvalume Plate (Flat)	3-inch diameter; Galvalume steel insulation plate
	Drill-Tec™ AccuTrac Flat Plate	3-inch square; Galvalume steel insulation plate
	Drill-Tec™ AccuTrac Recessed Plate	3-inch square; Galvalume steel insulation plate; For use with Paratherm G only
	Drill-Tec™ DF Steel Insulation Plate	3-inch round; Galvalume steel insulation plate
	Drill-Tec™ Extra Heavy Duty ASAP Roofing Fastener - Insulation	Drill-Tec XHD Fastener with Drill-Tec 3" Standard Steel Plate
	Drill-Tec™ Heavy Duty ASAP® Roofing Fastener Assembled with 3" Metal Plate	Drill-Tec #14 Fastener with Drill-Tec 3" Standard Steel Plate
	Parafast RB TPO XHD 3" Plate	Min. 3-inch diameter, steel insulation plate; Induction welded in the field of membrane with RhinoBond® welding tool; welds not permitted at lap seams
	Drill-Tec™ RhinoBond® XHD Tread Safe Plates	
	Drill-Tec™ ASAP® 3S	Drill-Tec #12 Fastener with Drill-Tec 3" Standard Steel Plate
	Drill-Tec™ #12 Fastener	#12 fastener; Min. 0.75-inch penetration through the top rib of the steel deck or wood deck
	Drill-Tec™ #12 DF Fastener	
	Drill-Tec™ #12 DP Fastener	
	Drill-Tec™ #12 DPH Fastener	
	Drill-Tec™ #14 Fastener	#14 fastener; Min. 0.75-inch penetration through the top rib of the steel deck or wood deck; Min. 1-inch penetration into concrete deck
	Drill-Tec™ #14 HD Fastener	
	Drill-Tec™ #15 EHD Fastener	#15 fastener; Min. 0.75-inch penetration through the top rib of the steel deck or wood deck
	Drill-Tec™ XHD Fastener	
	Drill-Tec™ SXHD Fastener	#21 fastener; Min. 0.75-inch penetration through the top rib of the steel deck or wood deck
	Drill-Tec™ Base Sheet Fastener	1.7-inch shank; Full embedment of shank into Cellular Lightweight Insulating Concrete substrate
	Drill-Tec™ Base Sheet Fastener E	
	Trufast® FM-290	
	Drill-Tec™ Hex-Head Purlin Fastener	Min. 3/4-inch penetration through purlin
	Drill-Tec™ Locking Impact Nail	1.8-inch shank; Full embedment of shank into Cellular Lightweight Insulating Concrete substrate
Vapor Barrier	GAFGLAS® #75 Base Sheet	ASTM D 4601, Type II sheet
	GAFGLAS® FlexPly 6	ASTM D 2178, Type IV and VI sheet
	GAFGLAS® FlexPly 6 M	ASTM D 2178, Type IV and VI sheet
	GAFGLAS® Ply 4	ASTM D 2178, Type IV sheet
	GAFGLAS® Ply 4 M	ASTM D 2178, Type IV sheet

This evaluation report is provided for State of Florida product approval under Rule 61G20-3. The manufacturer shall notify CREEK Technical Services, LLC of any product changes or quality assurance changes throughout the duration for which this report is valid. This evaluation report does not express nor imply warranty, installation, recommended use, or other product attributes that are not specifically addressed herein.

Component	Product	Installation Detail
Vapor Barrier (Continued)	Liberty™ SBS Self-Adhering Cap Sheet	ASTM D 6164, Type I
	Paratech Glass Base TG	ASTM D 6163, Type I, Grade S
	Paratech 180 Base TG	ASTM D 6164, Type I, Grade S
	Ruberoid® Torch Granule	ASTM D 6222, Type I, Grade G
	Ruberoid® Torch Smooth	ASTM D 6222, Type I, Grade S
	Siplast SA Vapor Retarder	Self-adhered membrane
	GAF SA Vapor Retarder XL 40	Self-adhered membrane
	Tri-Ply® #75 Base Sheet	ASTM D 4601, Type II
	Tri-Ply® Ply 4 Base Sheet	ASTM D 2178, Type IV
Vapor Barrier Primer	GAF SA Primer	Applied at a rate of 0.7-1.0 gal/100ft^2
	Matrix™ 307 Premium Asphalt Primer	Applied at a rate of 0.5 gal/100ft^2; rate varies with texture of surface to be primed
Insulation & Cover Board Adhesives	GAF LRF Adhesive M	Partially adhered in 0.75 to 1-inch wide ribbons
	GAF LRF Adhesive M Canister	Partially adhered in 1 to 1.5-inch wide ribbons
	GAF LRF Adhesive XF	Partially adhered in 0.75 to 1-inch wide ribbons
	Hot Asphalt	ASTM D 312 asphalt fully adhered within the EVT range at a rate of 20 - 25 lbs/100 ft^2; Boards shall be max. 4 ft. x 4ft. Concrete deck shall be primed with Matrix 307 Premium Asphalt Primer to application
	OlyBond500®	Partially adhered in 0.75 to 1-inch wide ribbons
Insulation/Cover Boards	Georgia-Pacific DensDeck® or DensDeck® Prime	Min. 0.25-inch thick; Adhered boards shall be a maximum 4 ft. x 4 ft.
	EnergyGuard™ HD Polyiso Insulation	Min. 0.5-inch thick; Min. 80 psi; Adhered boards shall be a maximum 4 ft. x 4 ft.
	Paratherm HD	
	Paratherm G	Min. 0.5-inch thick; Min. 20 psi; Adhered boards shall be a maximum 4 ft. x 4 ft.
	Paratherm G CG	
	National Gypsum DEXcell FA Glass Mat Roof Board	Min. 0.25-inch thick; Adhered boards shall be a maximum 4 ft. x 4 ft.
	Structodek High Density Fiberboard Roof Insulation	Min. 0.5-inch thick; Adhered boards shall be a maximum 4 ft. x 4 ft.
	USG SECUROCK® Glass-Mat Roof Board	Min. 0.25-inch thick; Adhered boards shall be a maximum 4 ft. x 4 ft.
	USG SECUROCK® Gypsum-Fiber Roof Board	Min. 0.25-inch thick; Adhered boards shall be a maximum 4 ft. x 4 ft.
Separator Sheets	EverGuard® Polymat Separation Layer	3 oz/yd²
	EverGuard® Polymat Cushioning Layer	6 oz/yd²
Single-Ply Adhesives	Hot Asphalt	ASTM D 312 asphalt fully adhered within the EVT range at a rate of 20 - 25 lbs/100 ft^2; For fleece-backed membranes only
	Parasolo 661 Bonding Adhesive	Fully adhered at rate of 1.67gal/100 ft^2; Applied simultaneously to underside of membrane and substrate
	EverGuard® PVC #2331 Bonding Adhesive H	
	EverGuard® TPO 1121 Bonding Adhesive	
	Parasolo PVC Quick-Lay Adhesive	Fully adhered at rate of 1gal/100 ft^2; Applied to substrate
	EverGuard® PVC Quick Spray Adhesive	Fully adhered at a rate of 2-4 lbs/100ft^2; Applied simultaneously to underside of membrane and substrate
	EverGuard® TPO 6 Square Low VOC Bonding Adhesive	Fully adhered at rate of 0.83gal/100 ft^2; Applied simultaneously to underside of membrane and substrate
	EverGuard® TPO 3 Square Low VOC Bonding Adhesive	Fully adhered at rate of 1.67/100 ft^2; Applied simultaneously to underside of membrane and substrate
	Parasolo TPX Quick Spray Adhesive	Fully adhered at rate of 0.71 lbs./100 ft^2; Applied simultaneously to underside of membrane and substrate
	Parasolo TPX Quick Spray Adhesive LV-50	Fully adhered at rate of 0.84 lbs./100 ft^2; Applied simultaneously to underside of membrane and substrate

This evaluation report is provided for State of Florida product approval under Rule 61G20-3. The manufacturer shall notify CREEK Technical Services, LLC of any product changes or quality assurance changes throughout the duration for which this report is valid. This evaluation report does not express nor imply warranty, installation, recommended use, or other product attributes that are not specifically addressed herein.

Component	Product	Installation Detail
Single-Ply Adhesives (Continued)	Parasolo TPX WB Bonding Adhesive	Fully adhered at rate of 0.83gal/100 ft^2; Applied simultaneously to underside of membrane and substrate
	LRF Adhesive O	Partially adhered in 1-inch wide ribbons; For fleece-backed membranes only
	GAF LRF Adhesive M	Partially adhered in 1-inch wide ribbons; For fleece-backed membranes only
	GAF LRF Adhesive M Canister	Adhered in "spatter" pattern at a rate of 0.55 to 0.75 gal./100ft^2; For fleece-backed membranes only
	GAF LRF Adhesive XF	Adhered in "spatter" pattern at a rate of 3 lbs./100ft^2; For fleece-backed membranes only
	OlyBond500®	Adhered in "spatter" pattern at a rate of 0.32 gal/100ft^2; For fleece-backed membranes only
Base Sheets	GAFGLAS® #75 Base Sheet	ASTM D 4601, Type II
	GAFGLAS® #80 Ultima Base Sheet	ASTM D 4601, Type II
	GAFGLAS® Stratavent® Nailable Venting Base Sheet	ASTM D 4897, Type II
	Paratech Glass Base	ASTM D 6163, Type I, Grade S
	Paratech Base TG	ASTM D 6163, Type I, Grade S
	Paratech 180 Base TG	ASTM D 6164, Type I, Grade S
	Paratech 250 Base	ASTM D 6164, Type II, Grade S
	Ruberoid® Mop Smooth 1.5	ASTM D 6164, Type I, Grade S
	Tri-Ply® #75 Base Sheet	ASTM D 4601 Type II
Base Sheet Adhesives	SFT H Membrane Adhesive	Fully adhered at rate of 1.5-2 gal/100ft^2
	Hot Asphalt	ASTM D 312 asphalt fully adhered within the EVT range at a rate of 20 - 25 lbs/100 ft^2;
Single-Ply Membranes	Parasolo PVC Smooth	Min. 2-inch wide side-laps with min. 1.5-inch wide heat weld; In-lap fastened systems shall have min. 6-inch wide side-laps with min. 1.5-inch wide heat weld; Side-laps shall be installed perpendicular to the direction of the steel deck ribs and parallel to the direction of the wood trusses for mechanically attached systems
	Parasolo PVC FB	
	Parasolo PVC KEE Smooth	
	Parasolo PVC KEE FB	
	Parasolo TPX Membrane	
	Parasolo TPX Fleece-Back Membrane	
Cellular Lightweight Insulating Concrete	Cellular Lightweight Insulating Concrete	Min. 2-inch thick

This evaluation report is provided for State of Florida product approval under Rule 61G20-3. The manufacturer shall notify CREEK Technical Services, LLC of any product changes or quality assurance changes throughout the duration for which this report is valid. This evaluation report does not express nor imply warranty, installation, recommended use, or other product attributes that are not specifically addressed herein.

Insulation/Cover Board Fastening Patterns	
16 per 4-ft x 8-ft board	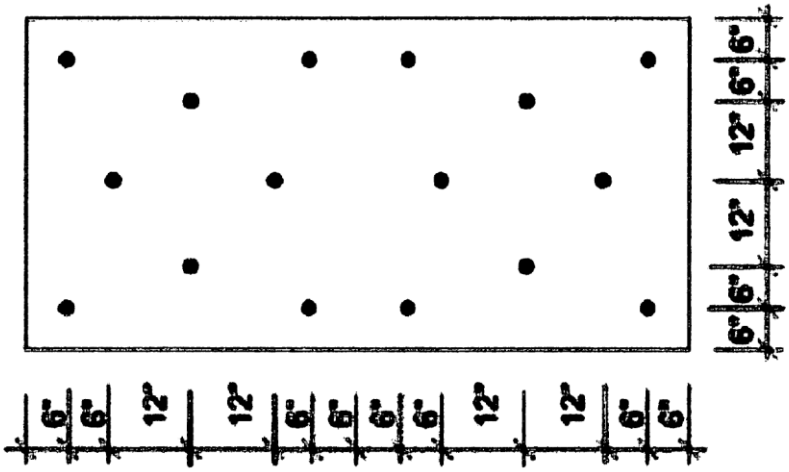 (Max. 2.0-ft^2 contributory area per fastener)
22 per 4-ft x 8-ft board	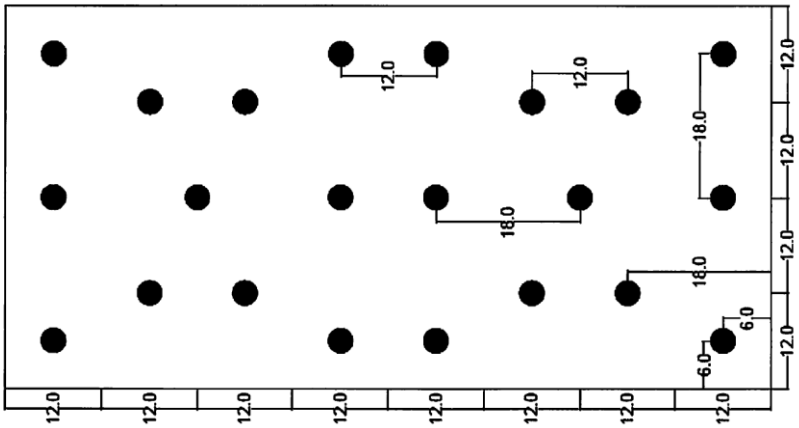 (Max. 1.45-ft^2 contributory area per fastener)

Alternate Fastener Patterns for Induction Weld Assemblies Only	
Description	Fastening Array Repeated Using the Geometric Grid Shown Below
16-inch x 18-inch staggered grid	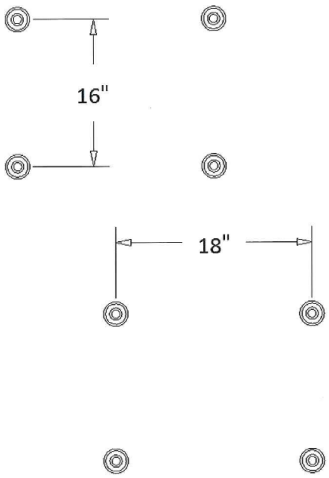

This evaluation report is provided for State of Florida product approval under Rule 61G20-3. The manufacturer shall notify CREEK Technical Services, LLC of any product changes or quality assurance changes throughout the duration for which this report is valid. This evaluation report does not express nor imply warranty, installation, recommended use, or other product attributes that are not specifically addressed herein.

Alternate Fastener Patterns for Induction Weld Assemblies Only	
Description	Fastening Array Repeated Using the Geometric Grid Shown Below
18-inch x 24-inch staggered grid	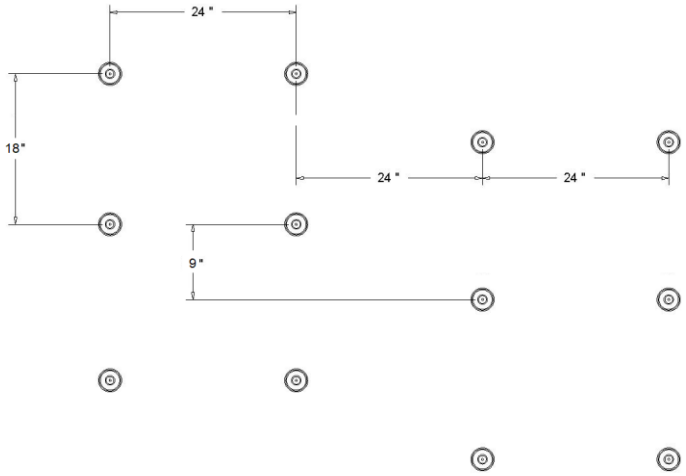

This evaluation report is provided for State of Florida product approval under Rule 61G20-3. The manufacturer shall notify CREEK Technical Services, LLC of any product changes or quality assurance changes throughout the duration for which this report is valid. This evaluation report does not express nor imply warranty, installation, recommended use, or other product attributes that are not specifically addressed herein.

NOMENCLATURE

The following naming conventions are utilized to specify products in the APPROVED ASSEMBLIES section of this report. Refer to the nomenclature below when deciphering the allowable products for use in the selected assembly. Installation requirements shall be as noted in the APPROVED ASSEMBLIES section of this report.

Name	Definition
#12	For *Steel Decks,* one of the following fasteners: Drill-Tec #12 Fastener, Drill-Tec #12 DP Fastener, Drill-Tec #14 Fastener, or Drill-Tec #14 HD Fastener For *Wood Decks*, only Drill-Tec #12 Fastener
#12DF	For *Steel Decks,* one of the following fasteners: Drill-Tec #12 Fastener, Drill-Tec #12 DF Fastener, Drill-Tec #12 DP Fastener, Drill-Tec #14 Fastener, Drill-Tec #14 DF Fastener, or Drill-Tec #14 HD Fastener For *Wood Decks*, only Drill-Tec #12 DF Fastener
#12DP	For *Steel Decks,* one of the following fasteners: Drill-Tec #12 DP Fastener, Drill-Tec #14 Fastener, or Drill-Tec #14 HD Fastener For *Wood Decks*, only Drill-Tec #12 DP Fastener
#14	For *Concrete Decks,* one of the following fasteners: Drill-Tec #14 Fastener, Drill-Tec #14 DF Fastener, or Drill-Tec #14 HD Fastener For *Steel Decks,* one of the following fasteners: Drill-Tec #14 Fastener, Drill-Tec #14 HD Fastener, Drill-Tec XHD Fastener, Drill-Tec #15 DF Fastener, or Drill-Tec #15 EHD Fastener For *Wood Decks*, only Drill-Tec #14 Fastener
#14DF	For *Concrete Decks,* one of the following fasteners: Drill-Tec #14 Fastener, Drill-Tec #14 DF Fastener, or Drill-Tec #14 HD Fastener For *Steel Decks,* one of the following fasteners: Drill-Tec #14 Fastener, Drill-Tec #14 DF Fastener, Drill-Tec #14 HD Fastener, Drill-Tec XHD Fastener, Drill-Tec #15 DF Fastener, or Drill-Tec #15 EHD Fastener For *Wood Decks*, only Drill-Tec #14 DF Fastener
#14HD	For *Concrete Decks,* only Drill-Tec #14 HD Fastener For *Steel Decks,* one of the following fasteners: Drill-Tec #14 HD Fastener or Drill-Tec #15 EHD Fastener For *Wood Decks*, only Drill-Tec #14 HD Fastener
#14 Drill-Tec	One of the following plate and fastener combinations: 1) Drill-Tec #14 Fasteners Drill-Tec 3" Steel Plate, Drill-Tec AccuTrac Flat Plate, or Drill-Tec AccuTrac Recessed Plate (insulation only), 2) Drill-Tec Heavy Duty ASAP Roofing Fastener Assembled with a 3" Metal Plate 3) Drill-Tec #14 HD Fastener with Drill-Tec 3" Flat Steel Plate

This evaluation report is provided for State of Florida product approval under Rule 61G20-3. The manufacturer shall notify CREEK Technical Services, LLC of any product changes or quality assurance changes throughout the duration for which this report is valid. This evaluation report does not express nor imply warranty, installation, recommended use, or other product attributes that are not specifically addressed herein.

Name	Definition		
1121	EverGuard TPO 1121 Bonding Adhesive		
3SQ	EverGuard TPO 3 Square Low VOC Bonding Adhesive		
6SQ	EverGuard TPO 6 Square Low VOC Bonding Adhesive		
AccuSeam	Drill-Tec Eyehook AccuSeam Plate		
AFP	Drill-Tec AccuTrac Flat Plate		
ARP	Drill-Tec AccuTrac Recessed Plate		
ASAF	Drill-Tec 3” ASAP Flat		
ASAP	Drill-Tec ASAP 3S		
ASAR	Drill-Tec 3” ASAP Recessed		
Base Sheet I	One ply of any of the following products: GAFGLAS #75 Base Sheet, Tri-Ply #75 Base Sheet, GAFGLAS #80 Ultima Base Sheet, GAFGLAS Stratavent Nailable Venting Base Sheet, or Paratech Glass Base		
Base Sheet II	Ruberoid Mop Smooth 1.5		
BSF	1.7-inch Drill-Tec Base Sheet Fastener, Drill-Tec Base Sheet Fastener E, or Drill-Tec Locking Impact Nail		
Deck Detail	*As Tested* deck construction details are described as follows:		
	Concrete Deck	Min. f'_c = 2,500 psi at 28 days	
	Steel Deck	Min. 22 ga, Wide Rib Deck (Type WR) conforming to ANSI/SDI-RD1.0 & FBC; 0.5% Vented and ASTM A653 G90 for *LWIC* applications only. The following nomenclature is used to further describe the *As Tested* condition.	
		F<#>	<#> #12-24 HWH self-drilling screws or equivalent fastener at each flute used to secure the deck to the structural supports; Min. 0.25-inch penetration
		G<#>	Min. Grade <#> of *Steel Deck*
		HS<#>	Hilti S-SLC 01 M HWH screws or equivalent fastener secured <#>-inch o.c. along the panel side laps
		HXE<#>	<#> Hilti X-ENP 19 L 15 powder-driven fasteners or equivalent at each flute used to secure the deck to the structural supports; Min. 0.25-inch penetration
		HXH<#>	<#> Hilti X-HSN 24 powder-driven fasteners or equivalent at each flute used to secure the deck to the structural supports; Min. 0.25-inch penetration
		L<#>	Max. span of <#> ft.
		P	Min. 5/8-inch diameter puddle welds at each flute used to secure the deck to the structural supports
		PW	Min. 5/8-inch diameter puddle welds with weld washers at each flute used to secure the deck to the structural supports
		S<#>	1/4 ”-14 HWH x7/8” self-drilling screws or equivalent fastener secured <#>-inch o.c. along the panel side laps
		W	0.75-inch O.D. flat washer used with indicated fastener
	Wood Deck	Solid or closely fitted min. 15/32 in., 32/16 span rated, 4-ply, CDX plywood sheathing for new and existing construction at max. 24 in. span; In the HVHZ, new construction shall be min. 19/32 in., 40/20 span rated, CDX plywood at max. 24 in. span. The following nomenclature is used to further describe the *As Tested* condition.	
		T<#>P	Min. <#>-inch thickness of the plywood or wood plank
		T<#>O	Min. <#>-inch thickness of the OSB sheathing
		L<#>	Max. span of <#> inches
		N<#>	8d ring shank nails spaced <#>-inch o.c. at all intermediate supports and at the perimeter of each board
DensDeck Prime	Min. 0.25-inch Georgia-Pacific DensDeck Prime Roof Board		
DEXcell FA	Min. 0.25-inch DEXcell FA Glass Mat Roof Board		

This evaluation report is provided for State of Florida product approval under Rule 61G20-3. The manufacturer shall notify CREEK Technical Services, LLC of any product changes or quality assurance changes throughout the duration for which this report is valid. This evaluation report does not express nor imply warranty, installation, recommended use, or other product attributes that are not specifically addressed herein.

Name	Definition
DFSP	Drill-Tec DF Steel Insulation Plate
Drill-Tec	One of the following plate and fastener combinations: 1) Drill-Tec #12 Fasteners, Drill-Tec #14 Fasteners, or Drill-Tec XHD Fastener with Drill-Tec 3" Steel Plate, Drill-Tec AccuTrac Flat Plate, or Drill-Tec AccuTrac Recessed Plate (insulation only), 2) Drill-Tec ASAP 3S 3) Drill-Tec Heavy Duty ASAP Roofing Fastener Assembled with a 3" Metal Plate 4) Drill-Tec Extra Heavy Duty ASAP Roofing Fastener - Insulation Drill-Tec #12 DP Fastener, Drill-Tec #14 HD Fastener or Drill-Tec #15 EHD Fastener with Drill-Tec 3" Flat Steel Plate 5) Drill-Tec #12 DPH Fastener with Drill-Tec 3" Recessed Steel Plate, Drill-Tec 3" ASAP Flat or Drill-Tec 3" ASAP Recessed
Drill-Tec #14 Seam	One of the following seam plate and fastener combinations: 1) Drill-Tec #14 Fasteners with Drill-Tec 2-3/8" Barbed XHD Plates, Drill-Tec 2-3/8" Double Barbed XHD Plates, Drill-Tec Eyehook AccuSeam Plates, Parafast XHD Barb Plate 2", or Parafast SXHD Barb Plate 2-3/4" 2) Drill-Tec #14 Fasteners with Parafast SXHD Barb Plate 2-3/4" 3) Drill-Tec #14 HD Fasteners with Drill-Tec 2.4" Barbed Seam Plate or Drill-Tec 2.4" Scoop Seam Plate
Drill-Tec Seam	One of the following seam plate and fastener combinations: 1) Drill-Tec XHD Fasteners with Drill-Tec 2-3/8" Barbed XHD Plates, Drill-Tec 2-3/8" Double Barbed XHD Plates, Drill-Tec Eyehook AccuSeam Plates, Parafast XHD Barb Plate 2", or Parafast SXHD Barb Plate 2-3/4" 2) Drill-Tec SXHD Fasteners with Parafast SXHD Barb Plate 2-3/4" 3) Drill-Tec #15 EHD Fasteners with Drill-Tec 2.4" Barbed Seam Plate or Drill-Tec 2.4" Scoop Seam Plate
DXHD	Drill-Tec 2-3/8" Double Barbed XHD Plate
EHD	Drill-Tec #15 EHD Fastener
FSP	Drill-Tec 3" Flat Steel Plate
HA	Hot Asphalt
HDAP	Drill-Tec Heavy Duty ASAP Roofing Fastener Assembled with a 3" Metal Plate
Insulation	Any *Approved* insulation or cover board
LRF-M	LRF Adhesive M or LRF Adhesive M Canister; Shall refer to LRF Adhesive M Canister applied in "spatter" where used as a fleeceback membrane adhesive unless ribbon spacing is given
LRF-O	LRF Adhesive O
LRF-XF	GAF LRF Adhesive XF
LV-50	Parasolo TPX Quick Spray Adhesive LV-50
LWIC	Cellular Lightweight Insulating Concrete
MCRF	Minimum Characteristic Resistance Force as determined by TAS 105 for the named fastener in the selected assembly
MDP	Maximum Design Pressure
OB500	OlyBond 500
PVC BA	Parasolo 661 Bonding Adhesive or EverGuard PVC #2331 Bonding Adhesive H
PVC	One ply of any one of the following products: 50-mil thick, 60-mil thick, or 80-mil thick Parasolo PVC Smooth
PVC FB	One ply of any one of the following products: 50-mil thick, 60-mil thick, or 80-mil thick Parasolo PVC FB
PVC KEE	One ply of any one of the following products: 50-mil thick, 60-mil thick, or 80-mil thick Parasolo PVC KEE Smooth

This evaluation report is provided for State of Florida product approval under Rule 61G20-3. The manufacturer shall notify CREEK Technical Services, LLC of any product changes or quality assurance changes throughout the duration for which this report is valid. This evaluation report does not express nor imply warranty, installation, recommended use, or other product attributes that are not specifically addressed herein.

Name	Definition
PVC KEE FB	One ply of any one of the following products: 50-mil thick, 60-mil thick, or 80-mil thick Parasolo PVC KEE FB
PLY HA	One or two plies of any of the following products applied in hot asphalt: Paratech Glass Base or Ruberoid Mop Smooth 1.5
PLY HA1	One ply of any of the following products applied in hot asphalt: Paratech Glass Base, Ruberoid Mop Smooth 1.5, or Paratech 250 Base
PLY TA	One or two plies of any of the following products applied by torch adhering: Paratech Glass Base TG or Paratech 180 Base TG
QLA	Parasolo PVC Quick-Lay Adhesive
QSA(P)	EverGuard PVC Quick Spray Adhesive
QSA(T)	Parasolo TPX Quick Spray Adhesive
Preliminarily Secured	Minimum four fasteners per 4-ft x 4-ft or 4-ft x 8-ft board
Recover	Where assemblies are used to recover an existing roof, the existing roof shall consist of only one layer of roofing, i.e. recovering a previously recovered roof is not permitted. Recover roofing shall be conducted in compliance with FBC Section 1511 outside of the HVHZ and FBC Section 1521 within the HVHZ. For mechanically fastened roof assemblies, the existing roof insulation thickness may be contributory in meeting the minimum insulation thickness requirements for a given assembly.
RGP	Drill-Tec 3 in. Ribbed Galvalume Plate (Flat)
RSP	Drill-Tec™ 3” Recessed Steel Plate
RhinoBond	Drill-Tec XHD Fastener (*Steel Deck* or *Wood Deck*) or Drill-Tec #14 Fasteners (*Concrete Deck*) with Parafast RB TPO XHD 3” Plate or Drill-Tec RhinoBond TPO XHD Tread Safe Plates
SECUROCK	USG SECUROCK® Gypsum-Fiber Roof Board
Separator Sheet	EverGuard Polymat Separation Layer or EverGuard Polymat Cushioning Layer
SFT H	SFT H Membrane Adhesive
SP	Drill-Tec 3” Steel Plate
SSP	Drill-Tec 3” Standard Steel Plate
Structodek	Structodek High Density Fiberboard Roof Insulation
SXHD Plate	Parafast SXHD Barb Plate 2-3/4”
TPO	One ply of any one of the following products: 50-mil thick, 60-mil thick, 70-mil or 80-mil thick Parasolo TPX Membrane
TPO FB	One ply of any one of the following products: 1) 50-mil thick, 60-mil thick, 70-mil or 80-mil thick ParasoloTPX Fleece-Back Membrane
WBBA	Parasolo TPX WB Bonding Adhesive
XHD	Drill-Tec XHD Fastener
XHD 2” Plate	Parafast XHD Barb Plate 2”
XHD 2-3/8” Plate	Drill-Tec 2-3/8” Barbed XHD Plate or Drill-Tec 2-3/8” Double Barbed XHD Plate

This evaluation report is provided for State of Florida product approval under Rule 61G20-3. The manufacturer shall notify CREEK Technical Services, LLC of any product changes or quality assurance changes throughout the duration for which this report is valid. This evaluation report does not express nor imply warranty, installation, recommended use, or other product attributes that are not specifically addressed herein.

Name	Definition				
Vapor Barrier	One of the following options may be utilized as allowed by the *Approved* Assembly in All Layers Adhered over *Concrete Deck* table. The *MDP* shall be limited to the lesser of rating of the *Approved Assembly* and the *MDP* for the chosen vapor barrier.				
	Primer	**Vapor Barrier**	**VB Application**	**Insulation Adhesives**	***MDP* (psf)**
	Matrix 307 Premium Asphalt Primer or ASTM D41 primer	One or two plies GAFGLAS Ply 4, GAFGLAS Ply 4 M, Tri-Ply Ply 4 Ply Sheet, GAFGLAS FlexPly 6, GAFGLAS Flex PLY M, or one ply of Paratech Glass Base	Hot asphalt applied	Hot Asphalt	-360.0
	Matrix 307 Premium Asphalt Primer or ASTM D41 primer	Paratech Glass Base TG or Paratech 180 Base TG	Torch-applied	*LRF-M* 12-inch o.c.	-180.0
	Matrix 307 Premium Asphalt Primer or ASTM D41 primer	Paratech Glass Base TG or Paratech 180 Base TG	Torch-applied	*LRF-XF* 12-inch o.c.	-180.0
	Matrix 307 Premium Asphalt Primer or ASTM D41 primer	Paratech Glass Base TG	Torch-applied	*OB500* 12-inch o.c.	-180.0
	Matrix 307 Premium Asphalt Primer or ASTM D41 primer	Paratech Glass Base	Matrix 102 SBS Membrane Adhesive at 1.5 gal/square	*OB500* 12-inch o.c.	-202.5
	Matrix 307 Premium Asphalt Primer or ASTM D41 primer	Paratech 180 Base TG	Torch-applied	*OB500* 12-inch o.c.	-232.5
	Matrix 307 Premium Asphalt Primer or ASTM D41 primer	One or two plies, GAFGLAS #75 Base Sheet, Tri-Ply #75 Base Sheet, GAFGLAS Ply 4, GAFGLAS Ply 4 M, Tri-Ply Ply 4 Ply Sheet, GAFGLAS FlexPly 6 or GAFGLAS FlexPly 6 M	Hot asphalt applied	*OB500* 12-inch o.c.	-352.5
	None	Siplast SA Vapor Retarder or GAF SA Vapor Retarder XL40	Self-adhered	*OB500* 12-inch o.c.	-127.5

This evaluation report is provided for State of Florida product approval under Rule 61G20-3. The manufacturer shall notify CREEK Technical Services, LLC of any product changes or quality assurance changes throughout the duration for which this report is valid. This evaluation report does not express nor imply warranty, installation, recommended use, or other product attributes that are not specifically addressed herein.

APPROVED ASSEMBLIES

The following notes shall be observed when using the assembly tables below.

1. Allowable pressures were calculated using a 2:1 margin of safety per FBC Section 1504.9 and 1523.4.
2. Refer to LIMITATIONS and NOMENCLATURE sections of this evaluation when using the table(s) below. Items *italicized* refer to specific nomenclature used in this report.
3. Refer to INSTALLATION section of this report for installation detail when the information is not explicitly stated for the selected assembly.
4. The on-center (o.c.) spacing given is the maximum allowable attachment spacing for the rated system.
5. Prior to application of the approved assembly an optional vapor barrier may be installed over concrete, steel, or wood decks when the approved assembly contains insulation or the membrane fastened through to the deck.
6. *As Tested* information for roof deck construction is provided for information only. The addition of the *As Tested* deck information does not obviate the requirement for rational design of the roof deck and roof deck attachment in accordance with FBC requirements.
7. Steel deck utilized in System Nos. S-A-# shall be ASTM A653, G90 galvanized steel.

Assembly System Numbers and Definitions	
C-A-#	Adhered Assemblies over *Concrete Deck* (New or Existing)
C-A-H#	Hybrid Adhered Assemblies over *Concrete Deck* (New or Existing)
C-M-#	Mechanically Fastened Assemblies over *Concrete Deck* (New, Existing, or *Recover*)
C-W-#	Induction Welded Assemblies over *Concrete Deck* (New, Existing, or *Recover*)
LC-A-#	Lightweight Insulating Concrete Assemblies with All Layers Adhered over *Concrete Deck* (New or Existing)
LS-A-#	Lightweight Insulating Concrete Assemblies with All Layers Adhered over *Steel Deck* (New or Existing)
L-AM-H#	Hybrid Lightweight Insulating Concrete Assemblies with Adhered Membranes over *Steel Deck* or *Concrete Deck* (New or Existing)
RC-M-#	*Recover* Mechanically Fastened Assemblies over *Concrete Deck*
RS-M-#	*Recover* Mechanically Fastened Assemblies over *Steel Deck*
RS-W-#	*Recover* Induction Welded Assemblies over *Steel Deck*
S-A-#	Assemblies with All Layers Adhered over *Steel Deck* (New or Existing)
S-AM-#	Assemblies with Adhered Membranes over Insulated Steel Deck (New, Existing, or Recover)
S-AM-H#	Hybrid Assemblies with Adhered Membranes over Insulated Steel Deck (New, Existing, or Recover)
S-M-#	Mechanically Fastened Assemblies over *Steel Deck* (New, Existing, or *Recover*)
S-W-#	Induction Welded Assemblies over *Steel Deck* (New, Existing, or *Recover*)
W-M-#	Mechanically Fastened Assemblies over *Wood Deck* (New, Existing, or *Recover*)

Adhered Assemblies over *Concrete Deck* (New, Existing, or *Recover*)								
System No.	Vapor Barrier	Base Layer	Base Layer Attachment	Top Layer	Top Layer Attachment	Membrane	Membrane Attachment	*MDP* (psf)
C-A-1	-	Min. 1.5-inch Paratherm G	*LRF-XF, LRF-M,* or *OB500* 12-inch o.c.	Paratherm HD	*LRF-XF, LRF-M,* or *OB500* 12-inch o.c.	*TPO FB*	*LRF-XF* or *OB500*	**-270 (Lim. 7)**

This evaluation report is provided for State of Florida product approval under Rule 61G20-3. The manufacturer shall notify CREEK Technical Services, LLC of any product changes or quality assurance changes throughout the duration for which this report is valid. This evaluation report does not express nor imply warranty, installation, recommended use, or other product attributes that are not specifically addressed herein.

Hybrid Adhered Assemblies over *Concrete Deck* (New, Existing, or *Recover*)								
System No.	Vapor Barrier	Base Layer	Base Layer Attachment	Top Layer	Top Layer Attachment	Base Ply	Membrane	*MDP* (psf)
C-A-H1	OPTIONAL *Vapor Barrier*	Min. 0.5-inch Paratherm G or Paratherm G CG	*HA*	*DensDeck Prime, SECUROCK,* or *Structodek*	*HA*	Paratech Glass Base adhered in *HA*	*TPO FB, PVC FB* or *PVC KEE FB* adhered in *LRF-M, LRF-XF,* or *OB500*	**-255 (Lim. 9)**

Mechanically Fastened Assemblies over *Concrete Deck* (New, Existing, or *Recover*)								
System No.	Vapor Barrier	Base Layer	Base Layer Attachment	Top Layer	Top Layer Attachment	Membrane	Membrane Attachment	*MDP* (psf)
C-M-1	OPTIONAL	Min. 1-inch *Insulation*	*Preliminarily Secured* or Secured with Top Layer	OPTIONAL *Separator Sheet*	*Preliminarily Secured*	*TPO* or Min. 60mil *TPO FB* (72-inch wide)	Attached in-lap 12-inch o.c. with *#14 & XHD 2" Plate;* Side laps spaced 66-inch o.c.	**-45 (Lim. 7)**
C-M-2	OPTIONAL	Min. 1-inch *Insulation*	*Preliminarily Secured* or Secured with Top Layer	OPTIONAL *Separator Sheet*	*Preliminarily Secured*	*TPO* or Min. 60mil *TPO FB* (144-inch wide)	Attached in-lap 6-inch o.c. with *#14 & XHD 2" Plate;* Side laps spaced 138-inch o.c.	**-45 (Lim. 7)**
C-M-3	OPTIONAL	Min. 1-inch *Insulation*	*Preliminarily Secured* or Secured with Top Layer	OPTIONAL *Separator Sheet*	*Preliminarily Secured*	Min. 60mil *TPO* or *TPO FB* (96-inch wide)	Attached in-lap 12-inch o.c. with *#14 & DXHD*; Side laps spaced 90-inch o.c.	**-45 (Lim. 7)**
C-M-4	OPTIONAL	Min. 1-inch *Insulation*	*Preliminarily Secured* or Secured with Top Layer	OPTIONAL *Separator Sheet*	*Preliminarily Secured*	*TPO* or Min. 60mil *TPO FB* (60-inch wide)	Attached in-lap 12-inch o.c. with *#14 & XHD 2" Plate;* Side laps spaced 54-inch o.c.	**-52.5 (Lim. 7)**
C-M-5	OPTIONAL	Min. 1-inch *Insulation*	*Preliminarily Secured* or Secured with Top Layer	OPTIONAL *Separator Sheet*	*Preliminarily Secured*	*TPO* or Min. 60mil *TPO FB* (72-inch wide)	Attached in-lap 12-inch o.c. with *#14 & SXHD Plate;* Side laps spaced 66-inch o.c.	**-52.5 (Lim. 7)**
C-M-6	OPTIONAL	Min. 1.5-inch *Insulation*	*Preliminarily Secured* or Secured with Top Layer	OPTIONAL *Separator Sheet*	*Preliminarily Secured*	*TPO* or Min. 60mil *TPO FB* (120-inch wide)	Attached in-lap 6-inch o.c. with *#14 & XHD 2-3/8" Plate* or *XHD 2" Plate;* Side laps spaced 114-inch o.c.	**-52.5 (Lim. 7)**
C-M-7	OPTIONAL	Min. 1-inch *Insulation*	*Preliminarily Secured* or Secured with Top Layer	OPTIONAL *Separator Sheet*	*Preliminarily Secured*	*TPO* or Min. 60mil *TPO FB* (60-inch wide)	Attached in-lap 12-inch o.c. with *#14 & SXHD Plate;* Side laps spaced 54-inch o.c.	**-60 (Lim. 7)**
C-M-8	OPTIONAL	Min. 1.5-inch *Insulation*	*Preliminarily Secured* or Secured with Top Layer	OPTIONAL *Separator Sheet*	*Preliminarily Secured*	Min. 60mil *TPO* (144-inch wide)	Attached in-lap 6-inch o.c. with *#14 & XHD 2" Plate;* Side laps spaced 138-inch o.c.	**-60 (Lim. 7)**
C-M-9	OPTIONAL	Min. 1-inch *Insulation*	*Preliminarily Secured* or Secured with Top Layer	OPTIONAL *Separator Sheet*	*Preliminarily Secured*	*TPO* or Min. 60mil *TPO FB* (120-inch wide)	Attached in-lap 6-inch o.c. with *#14 & SXHD Plate;* Side laps spaced 114-inch o.c.	**-67.5 (Lim. 7)**

This evaluation report is provided for State of Florida product approval under Rule 61G20-3. The manufacturer shall notify CREEK Technical Services, LLC of any product changes or quality assurance changes throughout the duration for which this report is valid. This evaluation report does not express nor imply warranty, installation, recommended use, or other product attributes that are not specifically addressed herein.

Mechanically Fastened Assemblies over *Concrete Deck* (New, Existing, or *Recover*)								
System No.	Vapor Barrier	Base Layer	Base Layer Attachment	Top Layer	Top Layer Attachment	Membrane	Membrane Attachment	*MDP* (psf)
C-M-10	OPTIONAL	Min. 1-inch *Insulation*	*Preliminarily Secured* or Secured with Top Layer	OPTIONAL *Separator Sheet*	*Preliminarily Secured*	Min. 60 mil *TPO* or *TPO FB* (144-inch wide)	Attached 6-inch o.c. through 6-inch wide overlaps with *#14 & XHD 2-3/8" Plate* spaced 138-inch o.c.; 8-inch wide cover strip attached over plates and sealed with a 1.5-inch wide heat weld on each side	**-67.5 (Lim. 7)**

Induction Welded Assemblies over *Concrete Deck* (New, Existing, or *Recover*)								
System No.	Vapor Barrier	Base Layer	Base Layer Attachment	Top Layer	Top Layer Attachment	Membrane	Membrane Attachment	*MDP* (psf)
C-W-1	OPTIONAL	Min. 1-inch *Insulation*	*Preliminarily Secured* or secured with top layer	OPTIONAL *Cover Board*	*RhinoBond* fastened in a *18-inch x 24-inch staggered grid*	*TPO*	Induction welded to *RhinoBond* plates	**-82.5 (Lim. 7)**
C-W-2	OPTIONAL	Min. 1.-inch *Insulation*	*Preliminarily Secured* or secured with top layer	OPTIONAL *Cover Board*	*RhinoBond* fastened 1 per 2.7ft^2 (18-inch x 24-inch grid)	*TPO*	Induction welded to *RhinoBond* plates	**-82.5 (Lim. 7)**
C-W-3	OPTIONAL	Min. 1-inch *Insulation*	*Preliminarily Secured* or secured with top layer	OPTIONAL *Cover Board*	*RhinoBond* fastened in a *16-inch x 18-inch staggered grid*	*TPO*	Induction welded to *RhinoBond* plates	**-105 (Lim. 7)**

Lightweight Concrete Assemblies with All Layers Adhered over *Concrete Deck* (New or Existing)							
System No.	Vapor Barrier	*LWIC*	Board Layer/Base Sheet	Board/Sheet Attachment	Membrane	Membrane Attachment	*MDP* (psf)
LC-A-1	-	Min. 235 psi *LWIC* (MCRF ≥ 85 lbf using Drill-Tec Base Sheet Fastener)	-	-	*PVC*	*QSA(P)*	**-112.5 (Lim. 9; HVHZ only)**
LC-A-2	-	Min. 235 psi *LWIC* (MCRF ≥ 85 lbf using Drill-Tec Base Sheet Fastener)	Paratech Glass Base	*SFT H*	*TPO FB*	*OB500*	**-112.5 (Lim. 9; HVHZ only)**

This evaluation report is provided for State of Florida product approval under Rule 61G20-3. The manufacturer shall notify CREEK Technical Services, LLC of any product changes or quality assurance changes throughout the duration for which this report is valid. This evaluation report does not express nor imply warranty, installation, recommended use, or other product attributes that are not specifically addressed herein.

Lightweight Concrete Assemblies with All Layers Adhered over *Concrete Deck* (New or Existing)							
System No.	Vapor Barrier	*LWIC*	Board Layer/Base Sheet	Board/Sheet Attachment	Membrane	Membrane Attachment	*MDP* (psf)
LC-A-3	-	Min. 235 psi *LWIC* (MCRF ≥ 85 lbf using Drill-Tec Base Sheet Fastener)	-	-	*TPO*	*LV-50*	**-112.5 (Lim. 9; HVHZ only)**
LC-A-4	-	Min. 400 psi *LWIC* (MCRF ≥ 117 lbf using Drill-Tec Base Sheet Fastener)	-	-	*TPO FB*	*OB500*	**-120 (Lim. 9; HVHZ only)**
LC-A-5	-	Min. 400 psi *LWIC* (MCRF ≥ 117 lbf using Drill-Tec Base Sheet Fastener)	-	-	*TPO*	*1121*	**-127.5 (Lim. 9; HVHZ only)**
LC-A-6	-	Min. 400 psi *LWIC* (MCRF ≥ 117 lbf using Drill-Tec Base Sheet Fastener)	-	-	*TPO FB*	*LRF-XF*	**-130 (Lim. 9; HVHZ only)**
LC-A-7	-	Min. 400 psi *LWIC* (MCRF ≥ 117 lbf using Drill-Tec Base Sheet Fastener)	Paratherm HD	*OB500* 12-inch o.c.	*TPO*	*QSA(T)*	**-140 (Lim. 9; HVHZ only)**
LC-A-8	-	Min. 400 psi *LWIC* (MCRF ≥ 117 lbf using Drill-Tec Base Sheet Fastener)	-	-	*TPO*	*QSA(T)*	**-150 (Lim. 9; HVHZ only)**
LC-A-9	-	Min. 400 psi *LWIC* (MCRF ≥ 117 lbf using Drill-Tec Base Sheet Fastener)	-	-	*TPO*	*LV-50*	**-155 (Lim. 9; HVHZ only)**
LC-A-10	-	Min. 400 psi *LWIC* (MCRF ≥ 117 lbf using Drill-Tec Base Sheet Fastener)	Paratherm HD	*LRF-XF* 12-inch o.c.	*TPO*	*QSA(T)*	**-230 (Lim. 9; HVHZ only)**
LC-A-11	-	Min. 248 psi *LWIC* (MCRF ≥ 111 lbf using Drill-Tec Base Sheet Fastener)	Paratech Glass Base	*SFT H*	*TPO FB*	*OB500*	**-230 (Lim. 9; HVHZ only)**
LC-A-12	-	Min. 248 psi *LWIC* (MCRF ≥ 111 lbf using Drill-Tec Base Sheet Fastener)	-	-	*TPO*	*LV-50*	**-230 (Lim. 9; HVHZ only)**

This evaluation report is provided for State of Florida product approval under Rule 61G20-3. The manufacturer shall notify CREEK Technical Services, LLC of any product changes or quality assurance changes throughout the duration for which this report is valid. This evaluation report does not express nor imply warranty, installation, recommended use, or other product attributes that are not specifically addressed herein.

Lightweight Concrete Assemblies with All Layers Adhered over *Concrete Deck* (New or Existing)							
System No.	Vapor Barrier	*LWIC*	Board Layer/Base Sheet	Board/Sheet Attachment	Membrane	Membrane Attachment	*MDP* (psf)
LC-A-13	-	Min. 418 psi *LWIC* (MCRF ≥ 116 lbf using Drill-Tec Base Sheet Fastener)	-	-	*TPO*	*LV-50*	**-297.5 (Lim. 9; HVHZ only)**
LC-A-14	-	Min. 200psi existing *LWIC*	-	-	*TPO FB*	*LRF-M or LRF-O* applied 4-inch o.c.	**-300 (Lim. 9; HVHZ only)**
LC-A-15	-	Min. 200psi existing *LWIC*	-	-	*TPO FB*	*LRF-XF*	**-300 (Lim. 9; HVHZ only)**

Lightweight Concrete Assemblies with All Layers Adhered over *Steel Deck* (New or Existing)							
System No.	*Deck Detail*	*LWIC*	Board Layer	Board Attachment	Membrane	Membrane Attachment	*MDP* (psf)
LS-A-1	*G33*	Min. 400 psi *LWIC* (MCRF ≥ 117 lbf using Drill-Tec Base Sheet Fastener)	-	-	*TPO FB*	*OB500*	**-120 (Lim. 9; HVHZ only)**
LS-A-2	*G33*	Min. 400 psi *LWIC* (MCRF ≥ 117 lbf using Drill-Tec Base Sheet Fastener)	-	-	*TPO*	*1121*	**-127.5 (Lim. 9; HVHZ only)**
LS-A-3	*G33*	Min. 400 psi *LWIC* (MCRF ≥ 117 lbf using Drill-Tec Base Sheet Fastener)	-	-	*TPO FB*	*LRF-XF*	**-130 (Lim. 9; HVHZ only)**
LS-A-4	*G33*	Min. 400 psi *LWIC* (MCRF ≥ 117 lbf using Drill-Tec Base Sheet Fastener)	Paratherm HD	*OB500* 12-inch o.c.	*TPO*	*QSA(T)*	**-140 (Lim. 9; HVHZ only)**
LS-A-5	*G33*	Min. 400 psi *LWIC* (MCRF ≥ 117 lbf using Drill-Tec Base Sheet Fastener)	-	-	*TPO*	*QSA(T)*	**-150 (Lim. 9; HVHZ only)**

This evaluation report is provided for State of Florida product approval under Rule 61G20-3. The manufacturer shall notify CREEK Technical Services, LLC of any product changes or quality assurance changes throughout the duration for which this report is valid. This evaluation report does not express nor imply warranty, installation, recommended use, or other product attributes that are not specifically addressed herein.

Lightweight Concrete Assemblies with All Layers Adhered over *Steel Deck* (New or Existing)							
System No.	*Deck Detail*	*LWIC*	Board Layer	Board Attachment	Membrane	Membrane Attachment	*MDP* (psf)
LS-A-6	*G33*	Min. 400 psi *LWIC* (MCRF ≥ 117 lbf using Drill-Tec Base Sheet Fastener)	-	-	*TPO*	*LV-50*	**-155 (Lim. 9; HVHZ only)**
LS-A-7	*G33*	Min. 400 psi *LWIC* (MCRF ≥ 117 lbf using Drill-Tec Base Sheet Fastener)	Paratherm HD	*LRF-XF* 12-inch o.c.	*TPO*	*QSA(T)*	**-230 (Lim. 9; HVHZ only)**

Lightweight Concrete Assemblies with Adhered Membranes (New or Existing)									
System No.	*Deck Detail*	LWIC	Base Layer	Base Layer Attachment	Top Layer	Top Layer Attachment	Base Ply	Membrane	*MDP* (psf)
L-AM-H1	*Steel Deck (G33, P, L6, S18) or Concrete Deck*	Min. 340 psi *LWIC* (*MCRF* ≥ 60lbf) with min. 1-inch EPS holey board	*Base Sheet I*	*BSF* attached 7-inch o.c. at the 4-inch laps and 7-inch o.c. in two equally spaced, staggered rows in the field of the roll	-	-	OPTIONAL *PLY HA* or *PLY TA*	*TPO FB, PVC FB,* or *PVC KEE FB* adhered in *HA*	**-52.5 (Lim. 7)**
L-AM-H2	*Steel Deck (G33, P, L6, S18) or Concrete Deck*	Min. 210 psi *LWIC* (*MCRF* ≥ 78lbf)	Paratech Glass Base	*BSF* attached 7-inch o.c. at the 4-inch laps and 7-inch o.c. in two equally spaced, staggered rows in the field of the roll	-	-	*PLY TA*	*TPO FB* adhered in *LRF-XF* or *OB500*	**-82.5 (Lim. 7)**
L-AM-H3	*Steel Deck (G33, P, L6, S18) or Concrete Deck*	Min. 210 psi *LWIC* (*MCRF* ≥ 78lbf)	GAFGLAS #80 Ultima Base Sheet	1.7-inch Drill-Tec Base Sheet Fastener attached 7-inch o.c. at the 4-inch laps and 7-inch o.c. in two equally spaced, staggered rows in the field of the roll	-	-	*PLY TA*	*TPO FB* adhered in *LRF-XF* or *OB500*	**-82.5 (Lim. 7)**

This evaluation report is provided for State of Florida product approval under Rule 61G20-3. The manufacturer shall notify CREEK Technical Services, LLC of any product changes or quality assurance changes throughout the duration for which this report is valid. This evaluation report does not express nor imply warranty, installation, recommended use, or other product attributes that are not specifically addressed herein.

Recover* Mechanically Fastened Assemblies over *Concrete Deck								
System No.	Vapor Barrier	Base Layer	Base Layer Attachment	Top Layer	Top Layer Attachment	Membrane	Membrane Attachment	*MDP* (psf)
RC-M-1	-	OPTIONAL *Insulation*	*Preliminarily Secured* or Secured with Top Layer	OPTIONAL *Separator Sheet*	*Preliminarily Secured*	*TPO* or Min. 60mil *TPO FB* (72-inch wide)	Attached in-lap 12-inch o.c. with *#14 & XHD 2" Plate;* Side laps spaced 66-inch o.c.	**-45 (Lim. 7)**
RC-M-2	-	OPTIONAL *Insulation*	*Preliminarily Secured* or Secured with Top Layer	OPTIONAL *Separator Sheet*	*Preliminarily Secured*	*TPO* or Min. 60mil *TPO FB* (144-inch wide)	Attached in-lap 6-inch o.c. with *#14 & XHD 2" Plate;* Side laps spaced 138-inch o.c.	**-45 (Lim. 7)**
RC-M-2	-	Min. 1-inch *Insulation*	*Preliminarily Secured* or Secured with Top Layer	OPTIONAL *Separator Sheet*	*Preliminarily Secured*	Min. 60mil *TPO* or *TPO FB* (96-inch wide)	Attached in-lap 12-inch o.c. with *#14 & DXHD*; Side laps spaced 90-inch o.c.	**-45 (Lim. 7)**
RC-M-3	-	OPTIONAL *Insulation*	*Preliminarily Secured* or Secured with Top Layer	OPTIONAL *Separator Sheet*	*Preliminarily Secured*	*TPO* or Min. 60mil *TPO FB* (60-inch wide)	Attached in-lap 12-inch o.c. with *#14 & XHD 2" Plate;* Side laps spaced 54-inch o.c.	**-52.5 (Lim. 7)**
RC-M-4	-	OPTIONAL *Insulation*	*Preliminarily Secured* or Secured with Top Layer	OPTIONAL *Separator Sheet*	*Preliminarily Secured*	*TPO* or Min. 60mil *TPO FB* (72-inch wide)	Attached in-lap 12-inch o.c. with *#14 & SXHD Plate;* Side laps spaced 66-inch o.c.	**-52.5 (Lim. 7)**
RC-M-5		OPTIONAL *Insulation*	*Preliminarily Secured* or Secured with Top Layer	OPTIONAL *Separator Sheet*	*Preliminarily Secured*	*TPO* or Min. 60mil *TPO FB* (120-inch wide)	Attached in-lap 6-inch o.c. with *#14 & XHD 2-3/8" Plate* or *XHD 2" Plate;* Side laps spaced 114-inch o.c.	**-52.5 (Lim. 7)**
RC-M-6	-	OPTIONAL *Insulation*	*Preliminarily Secured* or Secured with Top Layer	OPTIONAL *Separator Sheet*	*Preliminarily Secured*	*TPO* or Min. 60mil *TPO FB* (60-inch wide)	Attached in-lap 12-inch o.c. with *#14 & SXHD Plate;* Side laps spaced 54-inch o.c.	**-60 (Lim. 7)**
RC-M-7	-	OPTIONAL *Insulation*	*Preliminarily Secured* or Secured with Top Layer	OPTIONAL *Separator Sheet*	*Preliminarily Secured*	Min. 60mil *TPO* (144-inch wide)	Attached in-lap 6-inch o.c. with *#14 & XHD 2" Plate;* Side laps spaced 138-inch o.c.	**-60 (Lim. 7)**
RC-M-8		OPTIONAL *Insulation*	*Preliminarily Secured* or Secured with Top Layer	OPTIONAL *Separator Sheet*	*Preliminarily Secured*	*TPO* or Min. 60mil *TPO FB* (120-inch wide)	Attached in-lap 6-inch o.c. with *#14 & SXHD Plate;* Side laps spaced 114-inch o.c.	**-67.5 (Lim. 7)**
RC-M-9	-	OPTIONAL *Insulation*	*Preliminarily Secured* or Secured with Top Layer	OPTIONAL *Separator Sheet*	*Preliminarily Secured*	Min. 60 mil *TPO* or *TPO FB* (144-inch wide)	Attached 6-inch o.c. through 6-inch wide overlaps with *#14 & XHD 2-3/8" Plate* spaced 138-inch o.c.; 8-inch wide cover strip attached over plates and sealed with a 1.5-inch wide heat weld on each side	**-67.5 (Lim. 7)**

This evaluation report is provided for State of Florida product approval under Rule 61G20-3. The manufacturer shall notify CREEK Technical Services, LLC of any product changes or quality assurance changes throughout the duration for which this report is valid. This evaluation report does not express nor imply warranty, installation, recommended use, or other product attributes that are not specifically addressed herein.

Recover* Mechanically Fastened Assemblies over *Steel Deck									
System No.	*Deck Detail*	Vapor Barrier	Base Layer	Base Layer Attachment	Top Layer	Top Layer Attachment	Membrane	Membrane Attachment	*MDP* (psf)
RS-M-1	*G33, L6*	-	OPTIONAL *Insulation*	*Preliminarily Secured* or Secured with Top Layer	OPTIONAL *Separator Sheet*	*Preliminarily Secured*	*TPO* or Min. 60mil *TPO FB* (120-inch wide)	Attached in-lap 12-inch o.c. with *XHD & XHD 2-3/8" Plate;* Side laps spaced 114-inch o.c.	**-30 (Lim. 7; Non-HVHZ)**
RS-M-2	*G33, HXH1, L6, HS6*	-	OPTIONAL *Insulation*	*Preliminarily Secured* or Secured with Top Layer	OPTIONAL *Separator Sheet*	*Preliminarily Secured*	*TPO* or Min. 60mil *TPO FB* (72-inch wide)	Attached in-lap 12-inch o.c. with *XHD & XHD 2" Plate;* Side laps spaced 66-inch o.c.	**-45 (Lim. 7)**
RS-M-3	*G80, HXH1, L5, HS24*	-	OPTIONAL *Insulation*	*Preliminarily Secured* or Secured with Top Layer	OPTIONAL *Separator Sheet*	*Preliminarily Secured*	*TPO* or Min. 60mil *TPO FB* (144-inch wide)	Attached in-lap 6-inch o.c. with *XHD & XHD 2" Plate;* Side laps spaced 138-inch o.c.	**-45 (Lim. 7)**
RS-M-4	*G80, HXH1* or *F1, L6, HS24* or *S24*	-	OPTIONAL *Insulation*	*Preliminarily Secured* or Secured with Top Layer	OPTIONAL *Separator Sheet*	*Preliminarily Secured*	Min. 60mil *TPO* or *TPO FB* (96-inch wide)	Attached in-lap 12-inch o.c. with *EHD & DXHD;* Side laps spaced 90-inch o.c.	**-45 (Lim. 7)**
RS-M-5	*G33, HXH1* or *F1, L6, HS24* or *S24*	OPTIONAL	OPTIONAL *Insulation*	*Preliminarily Secured* or Secured with Top Layer	OPTIONAL *Separator Sheet*	*Preliminarily Secured*	Min. 60mil *TPO* (72-inch wide)	Attached in-lap 12-inch o.c. with *EHD & DXHD;* Side laps spaced 66-inch o.c.	**-45 (Lim. 7)**
RS-M-6	*G33, HXH1, L6, HS24*	-	OPTIONAL *Insulation*	*Preliminarily Secured* or Secured with Top Layer	OPTIONAL *Separator Sheet*	*Preliminarily Secured*	*TPO* or Min. 60mil *TPO FB* (60-inch wide)	Attached in-lap 12-inch o.c. with *XHD & XHD 2" Plate;* Side laps spaced 54-inch o.c.	**-52.5 (Lim. 7)**
RS-M-7	*G33, HXH1, L6, HS24*	-	OPTIONAL *Insulation*	*Preliminarily Secured* or Secured with Top Layer	OPTIONAL *Separator Sheet*	*Preliminarily Secured*	*TPO* or Min. 60mil *TPO FB* (72-inch wide)	Attached in-lap 12-inch o.c. with *XHD & SXHD Plate;* Side laps spaced 66-inch o.c.	**-52.5 (Lim. 7)**
RS-M-8	*G33, L6, F1, S24*	-	OPTIONAL *Insulation*	*Preliminarily Secured* or Secured with Top Layer	OPTIONAL *Separator Sheet*	*Preliminarily Secured*	*TPO* or Min. 60mil *TPO FB* (120-inch wide)	Attached in-lap 6-inch o.c. with *XHD & XHD 2-3/8" Plate* or *XHD 2" Plate;* Side laps spaced 114-inch o.c.	**-52.5 (Lim. 7)**
RS-M-9	*G33, HXH1, L6, HS24*	-	OPTIONAL *Insulation*	*Preliminarily Secured* or Secured with Top Layer	OPTIONAL *Separator Sheet*	*Preliminarily Secured*	*TPO* or Min. 60mil *TPO FB* (60-inch wide)	Attached in-lap 12-inch o.c. with *XHD & SXHD Plate;* Side laps spaced 54-inch o.c.	**-60 (Lim. 7)**
RS-M-10	*G33, P, L6, S24*	-	OPTIONAL *Insulation*	*Preliminarily Secured* or Secured with Top Layer	OPTIONAL *Separator Sheet*	*Preliminarily Secured*	Min. 60mil *TPO* (144-inch wide)	Attached in-lap 6-inch o.c. with *XHD & XHD 2" Plate;* Side laps spaced 138-inch o.c.	**-60 (Lim. 7)**
RS-M-11	*G33, P, L6, S24*	-	OPTIONAL *Insulation*	*Preliminarily Secured* or Secured with Top Layer	OPTIONAL *Separator Sheet*	*Preliminarily Secured*	*TPO* or Min. 60mil *TPO FB* (120-inch wide)	Attached in-lap 6-inch o.c. with *XHD & SXHD Plate;* Side laps spaced 114-inch o.c.	**-67.5 (Lim. 7)**

This evaluation report is provided for State of Florida product approval under Rule 61G20-3. The manufacturer shall notify CREEK Technical Services, LLC of any product changes or quality assurance changes throughout the duration for which this report is valid. This evaluation report does not express nor imply warranty, installation, recommended use, or other product attributes that are not specifically addressed herein.

Recover* Mechanically Fastened Assemblies over *Steel Deck									
System No.	*Deck Detail*	Vapor Barrier	Base Layer	Base Layer Attachment	Top Layer	Top Layer Attachment	Membrane	Membrane Attachment	*MDP* (psf)
RS-M-12	*G33, P, L6, S12*	-	OPTIONAL *Insulation*	*Preliminarily Secured* or Secured with Top Layer	OPTIONAL *Separator Sheet*	*Preliminarily Secured*	Min. 60mil *TPO* or *TPO FB* (144-inch wide)	Attached 6-inch o.c. through 6-inch wide overlaps with *XHD & XHD 2-3/8" Plate* spaced 138-inch o.c.; 8-inch wide cover strip attached over plates and sealed with a 1.5-inch wide heat weld on each side	**-67.5 (Lim. 7)**

Recover* Induction Welded Assemblies over *Steel Deck									
System No.	*Deck Detail*	Vapor Barrier	Base Layer	Base Layer Attachment	Top Layer	Top Layer Attachment	Membrane	Membrane Attachment	*MDP* (psf)
RS-W-1	Existing metal roof having Min. 16 ga. steel purlins at 60-inch o.c.	-	OPTIONAL *Insulation*	*Preliminarily Secured* or Secured with Top Layer	Min. 1-inch *Insulation*	Drill-Tec Hex-Head Purlin Fastener with Parafast RB TPO XHD 3" Plates installed 12-inch o.c. in rows spaced 120-inch o.c.	*TPO*	Induction welded to *RhinoBond* plates	**-30 (Lim. 7; Non-HVHZ)**
RS-W-2	Existing metal roof having Min. 16 ga. steel purlins at 72-inch o.c.	-	OPTIONAL *Insulation*	*Preliminarily Secured* or Secured with Top Layer	Min. 1-inch *Insulation*	Drill-Tec Hex-Head Purlin Fastener with Parafast RB TPO XHD 3" Plates installed 18-inch o.c. in rows spaced 72-inch o.c.	*TPO*	Induction welded to *RhinoBond* plates	**-30 (Lim. 7; Non-HVHZ)**
RS-W-3	Existing metal roof having Min. 16 ga. steel purlins at 72-inch o.c.	-	OPTIONAL *Insulation*	*Preliminarily Secured* or Secured with Top Layer	Min. 1-inch *Insulation*	Drill-Tec Hex-Head Purlin Fastener with Parafast RB TPO XHD 3" Plates installed 12-inch o.c. in rows spaced 72-inch o.c.	*TPO*	Induction welded to *RhinoBond* plates	**-37.5 (Lim. 7; Non-HVHZ)**
RS-W-4	Existing metal roof having Min. 16 ga. steel purlins at 60-inch o.c.	-	OPTIONAL *Insulation*	*Preliminarily Secured* or Secured with Top Layer	Min. 1-inch *Insulation*	Drill-Tec Hex-Head Purlin Fastener with Parafast RB TPO XHD 3" Plates installed 6-inch o.c. in rows spaced 60-inch o.c.	*TPO*	Induction welded to *RhinoBond* plates	**-90 (Lim. 7)**

This evaluation report is provided for State of Florida product approval under Rule 61G20-3. The manufacturer shall notify CREEK Technical Services, LLC of any product changes or quality assurance changes throughout the duration for which this report is valid. This evaluation report does not express nor imply warranty, installation, recommended use, or other product attributes that are not specifically addressed herein.

Assemblies with All Layers Adhered over *Steel Deck* (New or Existing)									
System No.	*Deck Detail*	Vapor Barrier	Base Layer	Base Layer Attachment	Top Layer	Top Layer Attachment	Membrane	Membrane Attachment	*MDP* (psf)
S-A-1	*G33, P, L6, S24*	-	Min. 1.5-inch Paratherm G	*LRF-M* 6-inch o.c.	-	-	*TPO*	*LV-50*	**-82.5 (Lim. 9)**
S-A-2	*G33, P, L6, S24*	-	Min. 1.5-inch Paratherm G	*LRF-M* 6-inch o.c.	-	-	*PVC* or *PVC KEE*	*PVC BA*	**-90 (Lim. 9)**
S-A-3	*G33, P, L6, S24*	-	Min. 1.5-inch Paratherm G	*LRF-M* 6-inch o.c.	-	-	*TPO*	*1121, 6SQ, 3SQ*, or *WBBA*	**-120 (Lim. 9)**
S-A-4	*G33, P, L6, S24*	-	Min. 1.5-inch Paratherm G	*LRF-M* 6-inch o.c.	-	-	*TPO FB*	*LRF-XF* or *OB500*	**-120 (Lim. 9)**

Assemblies with Adhered Membranes over Insulated *Steel Deck* (New, Existing, or *Recover*)									
System No.	*Deck Detail*	Vapor Barrier	Base Layer Attachment	Base Layer Attachment	Top Layer	Top Layer Attachment	Membrane	Membrane Attachment	*MDP* (psf)
S-AM-1	*G33*	OPTIONAL	Min. 1-inch *Insulation*	*Preliminarily Secured* or Secured with Top Layer	*DEXcell FA*	*#12* with *AFP, FSP*, or *RGP* secured 1 fastener per 4ft^2	*TPO*	*3SQ, 6SQ, 1121, LV-50, QSA(T)*, or *WBBA*	**-30 (Lim. 9; Non-HVHZ)**
S-AM-2	*G33*	OPTIONAL	Min. 1-inch *Insulation*	*Preliminarily Secured* or Secured with Top Layer	*DEXcell FA*	*#12DF* with *DFSP* secured 1 fastener per 4ft^2	*TPO*	*3SQ, 6SQ, 1121, LV-50, QSA(T)*, or *WBBA*	**-30 (Lim. 9; Non-HVHZ)**
S-AM-3	*G33*	OPTIONAL	Min. 1-inch *Insulation*	*Preliminarily Secured* or Secured with Top Layer	*DEXcell FA*	*#12* with *AFP, FSP*, or *RGP* secured 1 fastener per 4ft^2	*TPO FB, PVC FB*, or *PVC KEE FB*	*LRF-XF* or *OB500*	**-30 (Lim. 9; Non-HVHZ)**
S-AM-4	*G33*	OPTIONAL	Min. 1-inch *Insulation*	*Preliminarily Secured* or Secured with Top Layer	*DEXcell FA*	*#12DF* with *DFSP* secured 1 fastener per 4ft^2	*TPO FB, PVC FB*, or *PVC KEE FB*	*LRF-XF* or *OB500*	**-30 (Lim. 9; Non-HVHZ)**
S-AM-5	*G33*	OPTIONAL	Min. 1-inch *Insulation*	*Preliminarily Secured* or Secured with Top Layer	*DEXcell FA*	*#12* with *AFP, FSP*, or *RGP* secured 1 fastener per 4ft^2	*PVC* or *PVC KEE*	*PVC BA* or *QSA(P)*	**-30 (Lim. 9; Non-HVHZ)**

This evaluation report is provided for State of Florida product approval under Rule 61G20-3. The manufacturer shall notify CREEK Technical Services, LLC of any product changes or quality assurance changes throughout the duration for which this report is valid. This evaluation report does not express nor imply warranty, installation, recommended use, or other product attributes that are not specifically addressed herein.

Assemblies with Adhered Membranes over Insulated *Steel Deck* (New, Existing, or *Recover*)									
System No.	*Deck Detail*	Vapor Barrier	Base Layer Attachment	Base Layer Attachment	Top Layer	Top Layer Attachment	Membrane	Membrane Attachment	*MDP* (psf)
S-AM-6	*G33*	OPTIONAL	Min. 1-inch *Insulation*	*Preliminarily Secured* or Secured with Top Layer	*DEXcell FA*	*#12DF* with *DFSP* secured 1 fastener per 4ft^2	*PVC* or *PVC KEE*	*PVC BA* or *QSA(P)*	**-30 (Lim. 9; Non-HVHZ)**
S-AM-7	*G33*	OPTIONAL	Min. 1-inch *Insulation*	*Preliminarily Secured* or Secured with Top Layer	Min. 0.5-inch DensDeck Prime	*#12* with *AFP, DFSP, FSP, RGP, SP,* or *SSP*; or *ASAP* secured 1 fastener per 4ft^2	*TPO*	*LV-50, 1121, QSA(T)* or *3SQ*	**-45 (Lim. 9)**
S-AM-8	*G33*	OPTIONAL	Min. 1-inch *Insulation*	*Preliminarily Secured* or Secured with Top Layer	Min. 0.375-inch *SECUROCK*	*#12* with *AFP, FSP, RGP, SP,* or *SSP*; or *ASAP* secured 1 fastener per 4ft^2	*TPO*	*LV-50, 1121, QSA(T)* or *3SQ*	**-45 (Lim. 9)**
S-AM-9	*G33*	OPTIONAL	Min. 1-inch *Insulation*	*Preliminarily Secured* or Secured with Top Layer	Min. 0.5-inch DensDeck Prime	*#12* with *AFP, DFSP, FSP, RGP, SP,* or *SSP*; or *ASAP* secured 1 fastener per 4ft^2	*PVC*	*PVC BA,QLA*, or *QSA(P)*	**-45 (Lim. 9)**
S-AM-10	*G33*	OPTIONAL	Min. 1-inch *Insulation*	*Preliminarily Secured* or Secured with Top Layer	Min. 0.375-inch *SECUROCK*	*#12* with *AFP, FSP, RGP, SP,* or *SSP*; or *ASAP* secured 1 fastener per 4ft^2	*PVC*	*PVC BA, QLA*, or *QSA(P)*	**-45 (Lim. 9)**
S-AM-11	*G33*	OPTIONAL	Min. 1-inch *Insulation*	*Preliminarily Secured* or Secured with Top Layer	Min. 0.5-inch DensDeck Prime	*#12* with *AFP, DFSP, FSP, RGP, SP,* or *SSP*; or *ASAP* secured 1 fastener per 4ft^2	*PVC KEE*	*PVC BA,* or *QSA(P)*	**-45 (Lim. 9)**
S-AM-12	*G33*	OPTIONAL	Min. 1-inch *Insulation*	*Preliminarily Secured* or Secured with Top Layer	Min. 0.375-inch *SECUROCK*	*#12* with *AFP, FSP, RGP, SP,* or *SSP*; or *ASAP* secured 1 fastener per 4ft^2	*PVC KEE*	*PVC BA,* or *QSA(P)*	**-45 (Lim. 9)**
S-AM-13	*G33*	OPTIONAL	Min. 1-inch *Insulation*	*Preliminarily Secured* or Secured with Top Layer	*DEXcell FA*	*#12* with *AFP, FSP,* or *RGP* secured 1 fastener per 3.2ft^2	*TPO*	*3SQ, 6SQ, 1121, LV-50, QSA(T),* or *WBBA*	**-45 (Lim. 9)**
S-AM-14	*G33*	OPTIONAL	Min. 1-inch *Insulation*	*Preliminarily Secured* or Secured with Top Layer	*DEXcell FA*	*#12DF* with *DFSP* secured 1 fastener per 3.2ft^2	*TPO*	*3SQ, 6SQ, 1121, LV-50, QSA(T),* or *WBBA*	**-45 (Lim. 9)**
S-AM-15	*G33*	OPTIONAL	Min. 1-inch *Insulation*	*Preliminarily Secured* or Secured with Top Layer	*DEXcell FA*	*#12* with *AFP, FSP,* or *RGP* secured 1 fastener per 3.2ft^2	*TPO FB, PVC FB,* or *PVC KEE FB*	*LRF-XF* or *OB500*	**-45 (Lim. 9)**
S-AM-16	*G33*	OPTIONAL	Min. 1-inch *Insulation*	*Preliminarily Secured* or Secured with Top Layer	*DEXcell FA*	*#12DF* with *DFSP* secured 1 fastener per 3.2ft^2	*TPO FB, PVC FB,* or *PVC KEE FB*	*LRF-XF* or *OB500*	**-45 (Lim. 9)**

This evaluation report is provided for State of Florida product approval under Rule 61G20-3. The manufacturer shall notify CREEK Technical Services, LLC of any product changes or quality assurance changes throughout the duration for which this report is valid. This evaluation report does not express nor imply warranty, installation, recommended use, or other product attributes that are not specifically addressed herein.

Assemblies with Adhered Membranes over Insulated *Steel Deck* (New, Existing, or *Recover*)									
System No.	*Deck Detail*	Vapor Barrier	Base Layer Attachment	Base Layer Attachment	Top Layer	Top Layer Attachment	Membrane	Membrane Attachment	*MDP* (psf)
S-AM-17	*G33*	OPTIONAL	Min. 1-inch *Insulation*	*Preliminarily Secured* or Secured with Top Layer	*DEXcell FA*	*#12* with *AFP, FSP,* or *RGP* secured 1 fastener per 3.2ft^2	*PVC* or *PVC KEE*	*PVC BA* or *QSA(P)*	**-45 (Lim. 9)**
S-AM-18	*G33*	OPTIONAL	Min. 1-inch *Insulation*	*Preliminarily Secured* or Secured with Top Layer	*DEXcell FA*	*#12DF* with *DFSP* secured 1 fastener per 3.2ft^2	*PVC* or *PVC KEE*	*PVC BA* or *QSA(P)*	**-45 (Lim. 9)**
S-AM-19	*G33*	OPTIONAL	Min. 1-inch *Insulation*	*Preliminarily Secured* or Secured with Top Layer	Min. 0.5-inch *DEXcell FA*	*#12* with *AFP, FSP,* or *RGP* secured 1 fastener per 4ft^2	*TPO*	*3SQ, 6SQ, 1121, LV-50, QSA(T),* or *WBBA*	**-45 (Lim. 9)**
S-AM-20	*G33*	OPTIONAL	Min. 1-inch *Insulation*	*Preliminarily Secured* or Secured with Top Layer	Min. 0.5-inch *DEXcell FA*	*#12DF* with *DFSP* secured 1 fastener per 4ft^2	*TPO*	*3SQ, 6SQ, 1121, LV-50, QSA(T),* or *WBBA*	**-45 (Lim. 9)**
S-AM-21	*G33*	OPTIONAL	Min. 1-inch *Insulation*	*Preliminarily Secured* or Secured with Top Layer	Min. 0.5-inch *DEXcell FA*	*#12* with *AFP, FSP,* or *RGP* secured 1 fastener per 4ft^2	*TPO FB, PVC FB,* or *PVC KEE FB*	*LRF-XF* or *OB500*	**-45 (Lim. 9)**
S-AM-22	*G33*	OPTIONAL	Min. 1-inch *Insulation*	*Preliminarily Secured* or Secured with Top Layer	Min. 0.5-inch *DEXcell FA*	*#12DF* with *DFSP* secured 1 fastener per 4ft^2	*TPO FB, PVC FB,* or *PVC KEE FB*	*LRF-XF* or *OB500*	**-45 (Lim. 9)**
S-AM-23	*G33*	OPTIONAL	Min. 1-inch *Insulation*	*Preliminarily Secured* or Secured with Top Layer	Min. 0.5-inch *DEXcell FA*	*#12* with *AFP, FSP,* or *RGP* secured 1 fastener per 4ft^2	*PVC* or *PVC KEE*	*PVC BA* or *QSA(P)*	**-45 (Lim. 9)**
S-AM-24	*G33*	OPTIONAL	Min. 1-inch *Insulation*	*Preliminarily Secured* or Secured with Top Layer	Min. 0.5-inch *DEXcell FA*	*#12DF* with *DFSP* secured 1 fastener per 4ft^2	*PVC* or *PVC KEE*	*PVC BA* or *QSA(P)*	**-45 (Lim. 9)**
S-AM-25	*G33, F1* or *HXH1, L6, S12* or *HS12*	OPTIONAL	Min. 2-inch Paratherm G or Paratherm G CG	*#12DF* with *DFSP* secured 1 fastener per 1.78ft^2	Min. 0.5-inch DensDeck Prime, *SECUROCK,* or Paratherm HD	*LRF-XF, OB500,* or *LRF-M* 6-inch o.c.	*TPO*	*1121, 3SQ, QSA(T),* or *LV-50*	**-52.5 (Lim. 7)**
S-AM-26	*G33, F1* or *HXH1, L6, S12* or *HS12*	OPTIONAL	Min. 2-inch Paratherm G or Paratherm G CG	*#12* with *SP, DFP, SSP, AFP, ARP, RGP,* or *RSP* secured 1 fastener per 1.78ft^2	Min. 0.5-inch DensDeck Prime, *SECUROCK,* or Paratherm HD	*LRF-XF, OB500,* or *LRF-M* 6-inch o.c.	*TPO*	*1121, 3SQ, QSA(T),* or *LV-50*	**-52.5 (Lim. 7)**
S-AM-27	*G33, F1* or *HXH1, L6, S12* or *HS12*	OPTIONAL	Min. 2-inch Paratherm G or Paratherm G CG	*ASAP, ASAF, ASAR,* or *HDAP* secured 1 fastener per 1.78ft^2	Min. 0.5-inch DensDeck Prime, *SECUROCK,* or Paratherm HD	*LRF-XF, OB500,* or *LRF-M* 6-inch o.c.	*TPO*	*1121, 3SQ, QSA(T),* or *LV-50*	**-52.5 (Lim. 7)**

This evaluation report is provided for State of Florida product approval under Rule 61G20-3. The manufacturer shall notify CREEK Technical Services, LLC of any product changes or quality assurance changes throughout the duration for which this report is valid. This evaluation report does not express nor imply warranty, installation, recommended use, or other product attributes that are not specifically addressed herein.

Assemblies with Adhered Membranes over Insulated *Steel Deck* (New, Existing, or *Recover*)									
System No.	*Deck Detail*	Vapor Barrier	Base Layer Attachment	Base Layer Attachment	Top Layer	Top Layer Attachment	Membrane	Membrane Attachment	*MDP* (psf)
S-AM-28	*G33, F1* or *HXH1, L6, S12* or *HS12*	OPTIONAL	Min. 2-inch Paratherm G or Paratherm G CG	*#12DF* with *DFSP* secured 1 fastener per 1.78ft^2	Min. 0.5-inch DensDeck Prime, *SECUROCK*, or Paratherm HD	*LRF-XF, OB500,* or *LRF-M* 6-inch o.c.	*TPO FB*	*WBBA, LRF-XF, OB500,* or *LRF-M*	**-52.5 (Lim. 7)**
S-AM-29	*G33, F1* or *HXH1, L6, S12* or *HS12*	OPTIONAL	Min. 2-inch Paratherm G or Paratherm G CG	*#12* with *SP, DFP, SSP, AFP, ARP, RGP,* or *RSP* secured 1 fastener per 1.78ft^2	Min. 0.5-inch DensDeck Prime, *SECUROCK*, or Paratherm HD	*LRF-XF, OB500,* or *LRF-M* 6-inch o.c.	*TPO FB*	*WBBA, LRF-XF, OB500,* or *LRF-M*	**-52.5 (Lim. 7)**
S-AM-30	*G33, F1* or *HXH1, L6, S12* or *HS12*	OPTIONAL	Min. 2-inch Paratherm G or Paratherm G CG	*ASAP, ASAF, ASAR,* or *HDAP* secured 1 fastener per 1.78ft^2	Min. 0.5-inch DensDeck Prime, *SECUROCK*, or Paratherm HD	*LRF-XF, OB500,* or *LRF-M* 6-inch o.c.	*TPO FB*	*WBBA, LRF-XF, OB500,* or *LRF-M*	**-52.5 (Lim. 7)**
S-AM-31	*G33, F1* or *HXH1, L6, S12* or *HS12*	OPTIONAL	Min. 2-inch Paratherm G or Paratherm G CG	*#12DF* with *DFSP* secured 1 fastener per 1.78ft^2	Min. 0.5-inch DensDeck Prime, *SECUROCK*, or Paratherm HD	*LRF-XF, OB500,* or *LRF-M* 6-inch o.c.	*PVC* or *PVC KEE*	*PVC BA, QSA(P)*	**-52.5 (Lim. 7)**
S-AM-32	*G33, F1* or *HXH1, L6, S12* or *HS12*	OPTIONAL	Min. 2-inch Paratherm G or Paratherm G CG	*#12* with *SP, DFP, SSP, AFP, ARP, RGP,* or *RSP* secured 1 fastener per 1.78ft^2	Min. 0.5-inch DensDeck Prime, *SECUROCK*, or Paratherm HD	*LRF-XF, OB500,* or *LRF-M* 6-inch o.c.	*PVC* or *PVC KEE*	*PVC BA, QSA(P)*	**-52.5 (Lim. 7)**
S-AM-33	*G33, F1* or *HXH1, L6, S12* or *HS12*	OPTIONAL	Min. 2-inch Paratherm G or Paratherm G CG	*ASAP, ASAF, ASAR,* or *HDAP* secured 1 fastener per 1.78ft^2	Min. 0.5-inch DensDeck Prime, *SECUROCK*, or Paratherm HD	*LRF-XF, OB500,* or *LRF-M* 6-inch o.c.	*PVC* or *PVC KEE*	*PVC BA, QSA(P)*	**-52.5 (Lim. 7)**
S-AM-34	*G33, F1* or *HXH1, L6, S12* or *HS12*	OPTIONAL	Min. 2-inch *Paratherm G*	*#12DF* with *DFSP* secured 1 fastener per 1.78ft^2	Min. 0.5-inch DensDeck Prime, *SECUROCK*, or Paratherm HD	*LRF-XF, OB500,* or *LRF-M* 6-inch o.c.	*PVC*	*QLA*	**-52.5 (Lim. 7)**
S-AM-35	*G33, F1* or *HXH1, L6, S12* or *HS12*	OPTIONAL	Min. 2-inch Paratherm G or Paratherm G CG	*#12* with *SP, DFP, SSP, AFP, ARP, RGP,* or *RSP* secured 1 fastener per 1.78ft^2	Min. 0.5-inch DensDeck Prime, *SECUROCK*, or Paratherm HD	*LRF-XF, OB500,* or *LRF-M* 6-inch o.c.	*PVC*	*QLA*	**-52.5 (Lim. 7)**

This evaluation report is provided for State of Florida product approval under Rule 61G20-3. The manufacturer shall notify CREEK Technical Services, LLC of any product changes or quality assurance changes throughout the duration for which this report is valid. This evaluation report does not express nor imply warranty, installation, recommended use, or other product attributes that are not specifically addressed herein.

Assemblies with Adhered Membranes over Insulated *Steel Deck* (New, Existing, or *Recover*)									
System No.	*Deck Detail*	Vapor Barrier	Base Layer Attachment	Base Layer Attachment	Top Layer	Top Layer Attachment	Membrane	Membrane Attachment	*MDP* (psf)
S-AM-36	*G33, F1* or *HXH1, L6, S12* or *HS12*	OPTIONAL	Min. 2-inch Paratherm G or Paratherm G CG	*ASAP, ASAF, ASAR,* or *HDAP* secured 1 fastener per 1.78ft^2	Min. 0.5-inch DensDeck Prime, *SECUROCK,* or Paratherm HD	*LRF-XF, OB500,* or *LRF-M* 6-inch o.c.	*PVC*	*QLA*	**-52.5 (Lim. 7)**
S-AM-37	*G33, F1* or *HXH1, L6, S12* or *HS12*	OPTIONAL	Min. 2-inch Paratherm G or Paratherm G CG	*#12DF* with *DFSP* secured 1 fastener per 1.78ft^2	Min. 0.5-inch DensDeck Prime or Paratherm HD	*LRF-XF, OB500,* or *LRF-M* 6-inch o.c.	*PVC FB* or *PVC KEE FB*	*WBBA*	**-52.5 (Lim. 7)**
S-AM-38	*G33, F1* or *HXH1, L6, S12* or *HS12*	OPTIONAL	Min. 2-inch Paratherm G or Paratherm G CG	*#12* with *SP, DFP, SSP, AFP, ARP, RGP,* or *RSP* secured 1 fastener per 1.78ft^2	Min. 0.5-inch DensDeck Prime, or Paratherm HD	*LRF-XF, OB500,* or *LRF-M* 6-inch o.c.	*PVC FB* or *PVC KEE FB*	*WBBA*	**-52.5 (Lim. 7)**
S-AM-39	*G33, F1* or *HXH1, L6, S12* or *HS12*	OPTIONAL	Min. 2-inch Paratherm G or Paratherm G CG	*ASAP, ASAF, ASAR,* or *HDAP* secured 1 fastener per 1.78ft^2	Min. 0.5-inch DensDeck Prime, or Paratherm HD	*LRF-XF, OB500,* or *LRF-M* 6-inch o.c.	*PVC FB* or *PVC KEE FB*	*WBBA*	**-52.5 (Lim. 7)**
S-AM-40	*G33, F1* or *HXH1, L6, S12* or *HS12*	OPTIONAL	Min. 2-inch Paratherm G or Paratherm G CG	*#12DF* with *DFSP* secured 1 fastener per 1.78ft^2	Min. 0.5-inch DensDeck Prime, *SECUROCK,* or Paratherm HD	*LRF-XF, OB500,* or *LRF-M* 6-inch o.c.	*PVC FB* or *PVC KEE FB*	*LRF-XF, OB500,* or *LRF-M*	**-52.5 (Lim. 7)**
S-AM-41	*G33, F1* or *HXH1, L6, S12* or *HS12*	OPTIONAL	Min. 2-inch Paratherm G or Paratherm G CG	*#12* with *SP, DFP, SSP, AFP, ARP, RGP,* or *RSP* secured 1 fastener per 1.78ft^2	Min. 0.5-inch DensDeck Prime, *SECUROCK,* or Paratherm HD	*LRF-XF, OB500,* or *LRF-M* 6-inch o.c.	*PVC FB* or *PVC KEE FB*	*LRF-XF, OB500,* or *LRF-M*	**-52.5 (Lim. 7)**
S-AM-42	*G33, F1* or *HXH1, L6, S12* or *HS12*	OPTIONAL	Min. 2-inch Paratherm G or Paratherm G CG	*ASAP, ASAF, ASAR,* or *HDAP* secured 1 fastener per 1.78ft^2	Min. 0.5-inch DensDeck Prime, *SECUROCK,* or Paratherm HD	*LRF-XF, OB500,* or *LRF-M* 6-inch o.c.	*PVC FB* or *PVC KEE FB*	*LRF-XF, OB500,* or *LRF-M*	**-52.5 (Lim. 7)**
S-AM-43	*G33, F1* or *HXH1, L6, S12* or *HS12*	OPTIONAL	Min. 2-inch Paratherm G or Paratherm G CG	*#12DF* with *DFSP* secured 1 fastener per 1.6ft^2	Min. 0.5-inch DensDeck Prime, *SECUROCK,* or Paratherm HD	*LRF-XF, OB500,* or *LRF-M* 6-inch o.c.	*TPO*	*1121, 3SQ, QSA(T),* or *LV-50*	**-75 (Lim. 7)**

This evaluation report is provided for State of Florida product approval under Rule 61G20-3. The manufacturer shall notify CREEK Technical Services, LLC of any product changes or quality assurance changes throughout the duration for which this report is valid. This evaluation report does not express nor imply warranty, installation, recommended use, or other product attributes that are not specifically addressed herein.

Assemblies with Adhered Membranes over Insulated *Steel Deck* (New, Existing, or *Recover*)									
System No.	*Deck Detail*	Vapor Barrier	Base Layer Attachment	Base Layer Attachment	Top Layer	Top Layer Attachment	Membrane	Membrane Attachment	*MDP* (psf)
S-AM-44	*G33, F1* or *HXH1, L6, S12* or *HS12*	OPTIONAL	Min. 2-inch Paratherm G or Paratherm G CG	*#12* with *SP, DFP, SSP, AFP, ARP, RGP,* or *RSP* secured 1 fastener per 1.6ft^2	Min. 0.5-inch DensDeck Prime, *SECUROCK,* or Paratherm HD	*LRF-XF, OB500,* or *LRF-M* 6-inch o.c.	*TPO*	*1121, 3SQ, QSA(T),* or *LV-50*	**-75 (Lim. 7)**
S-AM-45	*G33, F1* or *HXH1, L6, S12* or *HS12*	OPTIONAL	Min. 2-inch Paratherm G or Paratherm G CG	*ASAP, ASAF, ASAR,* or *HDAP* secured 1 fastener per 1.6ft^2	Min. 0.5-inch DensDeck Prime, *SECUROCK,* or Paratherm HD	*LRF-XF, OB500,* or *LRF-M* 6-inch o.c.	*TPO*	*1121, 3SQ, QSA(T),* or *LV-50*	**-75 (Lim. 7)**
S-AM-46	*G33, F1* or *HXH1, L6, S12* or *HS12*	OPTIONAL	Min. 2-inch Paratherm G or Paratherm G CG	*#12DF* with *DFSP* secured 1 fastener per 1.6ft^2	Min. 0.5-inch DensDeck Prime, *SECUROCK,* or Paratherm HD	*LRF-XF, OB500,* or *LRF-M* 6-inch o.c.	*TPO FB*	*WBBA, LRF-XF, OB500,* or *LRF-M*	**-75 (Lim. 7)**
S-AM-47	*G33, F1* or *HXH1, L6, S12* or *HS12*	OPTIONAL	Min. 2-inch Paratherm G or Paratherm G CG	*#12* with *SP, DFP, SSP, AFP, ARP, RGP,* or *RSP* secured 1 fastener per 1.6ft^2	Min. 0.5-inch DensDeck Prime, *SECUROCK,* or Paratherm HD	*LRF-XF, OB500,* or *LRF-M* 6-inch o.c.	*TPO FB*	*WBBA, LRF-XF, OB500,* or *LRF-M*	**-75 (Lim. 7)**
S-AM-48	*G33, F1* or *HXH1, L6, S12* or *HS12*	OPTIONAL	Min. 2-inch Paratherm G or Paratherm G CG	*ASAP, ASAF, ASAR,* or *HDAP* secured 1 fastener per 1.6ft^2	Min. 0.5-inch DensDeck Prime, *SECUROCK,* or Paratherm HD	*LRF-XF, OB500,* or *LRF-M* 6-inch o.c.	*TPO FB*	*WBBA, LRF-XF, OB500,* or *LRF-M*	**-75 (Lim. 7)**
S-AM-49	*G33, F1* or *HXH1, L6, S12* or *HS12*	OPTIONAL	Min. 2-inch Paratherm G or Paratherm G CG	*#12DF* with *DFSP* secured 1 fastener per 1.6ft^2	Min. 0.5-inch DensDeck Prime, *SECUROCK,* or Paratherm HD	*LRF-XF, OB500,* or *LRF-M* 6-inch o.c.	*PVC* or *PVC KEE*	*PVC BA, QSA(P)*	**-75 (Lim. 7)**
S-AM-50	*G33, F1* or *HXH1, L6, S12* or *HS12*	OPTIONAL	Min. 2-inch Paratherm G or Paratherm G CG	*#12* with *SP, DFP, SSP, AFP, ARP, RGP,* or *RSP* secured 1 fastener per 1.6ft^2	Min. 0.5-inch DensDeck Prime, *SECUROCK,* or Paratherm HD	*LRF-XF, OB500,* or *LRF-M* 6-inch o.c.	*PVC* or *PVC KEE*	*PVC BA, QSA(P)*	**-75 (Lim. 7)**
S-AM-51	*G33, F1* or *HXH1, L6, S12* or *HS12*	OPTIONAL	Min. 2-inch Paratherm G or Paratherm G CG	*ASAP, ASAF, ASAR,* or *HDAP* secured 1 fastener per 1.6ft^2	Min. 0.5-inch DensDeck Prime, *SECUROCK,* or Paratherm HD	*LRF-XF, OB500,* or *LRF-M* 6-inch o.c.	*PVC* or *PVC KEE*	*PVC BA, QSA(P)*	**-75 (Lim. 7)**
S-AM-52	*G33, F1* or *HXH1, L6, S12* or *HS12*	OPTIONAL	Min. 2-inch Paratherm G or Paratherm G CG	*#12DF* with *DFSP* secured 1 fastener per 1.6ft^2	Min. 0.5-inch DensDeck Prime, *SECUROCK,* or Paratherm HD	*LRF-XF, OB500,* or *LRF-M* 6-inch o.c.	*PVC*	*QLA*	**-75 (Lim. 7)**

This evaluation report is provided for State of Florida product approval under Rule 61G20-3. The manufacturer shall notify CREEK Technical Services, LLC of any product changes or quality assurance changes throughout the duration for which this report is valid. This evaluation report does not express nor imply warranty, installation, recommended use, or other product attributes that are not specifically addressed herein.

Assemblies with Adhered Membranes over Insulated *Steel Deck* (New, Existing, or *Recover*)									
System No.	*Deck Detail*	Vapor Barrier	Base Layer Attachment	Base Layer Attachment	Top Layer	Top Layer Attachment	Membrane	Membrane Attachment	*MDP* (psf)
S-AM-53	*G33, F1* or *HXH1, L6, S12* or *HS12*	OPTIONAL	Min. 2-inch Paratherm G or Paratherm G CG	*#12* with *SP, DFP, SSP, AFP, ARP, RGP,* or *RSP* secured 1 fastener per 1.6ft^2	Min. 0.5-inch DensDeck Prime, *SECUROCK,* or Paratherm HD	*LRF-XF, OB500,* or *LRF-M* 6-inch o.c.	*PVC*	*QLA*	**-75 (Lim. 7)**
S-AM-54	*G33, F1* or *HXH1, L6, S12* or *HS12*	OPTIONAL	Min. 2-inch Paratherm G or Paratherm G CG	*ASAP, ASAF, ASAR,* or *HDAP* secured 1 fastener per 1.6ft^2	Min. 0.5-inch DensDeck Prime, *SECUROCK,* or Paratherm HD	*LRF-XF, OB500,* or *LRF-M* 6-inch o.c.	*PVC*	*QLA*	**-75 (Lim. 7)**
S-AM-55	*G33, F1* or *HXH1, L6, S12* or *HS12*	OPTIONAL	Min. 2-inch Paratherm G or Paratherm G CG	*#12DF* with *DFSP* secured 1 fastener per 1.6ft^2	Min. 0.5-inch DensDeck Prime or Paratherm HD	*LRF-XF, OB500,* or *LRF-M* 6-inch o.c.	*PVC FB* or *PVC KEE FB*	*WBBA*	**-75 (Lim. 7)**
S-AM-56	*G33, F1* or *HXH1, L6, S12* or *HS12*	OPTIONAL	Min. 2-inch Paratherm G or Paratherm G CG	*#12* with *SP, DFP, SSP, AFP, ARP, RGP,* or *RSP* secured 1 fastener per 1.6ft^2	Min. 0.5-inch DensDeck Prime or Paratherm HD	*LRF-XF, OB500,* or *LRF-M* 6-inch o.c.	*PVC FB* or *PVC KEE FB*	*WBBA*	**-75 (Lim. 7)**
S-AM-57	*G33, F1* or *HXH1, L6, S12* or *HS12*	OPTIONAL	Min. 2-inch Paratherm G or Paratherm G CG	*ASAP, ASAF, ASAR,* or *HDAP* secured 1 fastener per 1.6ft^2	Min. 0.5-inch DensDeck Prime or Paratherm HD	*LRF-XF, OB500,* or *LRF-M* 6-inch o.c.	*PVC FB* or *PVC KEE FB*	*WBBA*	**-75 (Lim. 7)**
S-AM-58	*G33, F1* or *HXH1, L6, S12* or *HS12*	OPTIONAL	Min. 2-inch Paratherm G or Paratherm G CG	*#12DF* with *DFSP* secured 1 fastener per 1.6ft^2	Min. 0.5-inch DensDeck Prime, *SECUROCK,* or Paratherm HD	*LRF-XF, OB500,* or *LRF-M* 6-inch o.c.	*PVC FB* or *PVC KEE FB*	*LRF-XF, OB500,* or *LRF-M*	**-75 (Lim. 7)**
S-AM-59	*G33, F1* or *HXH1, L6, S12* or *HS12*	OPTIONAL	Min. 2-inch Paratherm G or Paratherm G CG	*#12* with *SP, DFP, SSP, AFP, ARP, RGP,* or *RSP* secured 1 fastener per 1.6ft^2	Min. 0.5-inch DensDeck Prime, *SECUROCK,* or Paratherm HD	*LRF-XF, OB500,* or *LRF-M* 6-inch o.c.	*PVC FB* or *PVC KEE FB*	*LRF-XF, OB500,* or *LRF-M*	**-75 (Lim. 7)**
S-AM-60	*G33, F1* or *HXH1, L6, S12* or *HS12*	OPTIONAL	Min. 2-inch Paratherm G or Paratherm G CG	*ASAP, ASAF, ASAR,* or *HDAP* secured 1 fastener per 1.6ft^2	Min. 0.5-inch DensDeck Prime, *SECUROCK,* or Paratherm HD	*LRF-XF, OB500,* or *LRF-M* 6-inch o.c.	*PVC FB* or *PVC KEE FB*	*LRF-XF, OB500,* or *LRF-M*	**-75 (Lim. 7)**
S-AM-61	*G33, P, L6, S24*	OPTIONAL	Min. 1-inch *Insulation*	*Preliminarily Secured* or Secured with Top Layer	Min. 0.5-inch DensDeck Prime	*#12DF* with *AFP, DFSP, RGP, FSP, SP,* or *SSP* secured *16 per 4-ft x 8-ft board*	*TPO*	*LV-50, 1121, QSA(T)* or *3SQ*	**-67.5 (Lim. 7)**
S-AM-62	*G33, P, L6, S24*	OPTIONAL	Min. 1-inch *Insulation*	*Preliminarily Secured* or Secured with Top Layer	Min. 0.5-inch *SECUROCK*	*#12DF* with *AFP* or *FSP* secured *16 per 4-ft x 8-ft board*	*TPO*	*LV-50, 1121, QSA(T)* or *3SQ*	**-67.5 (Lim. 7)**

This evaluation report is provided for State of Florida product approval under Rule 61G20-3. The manufacturer shall notify CREEK Technical Services, LLC of any product changes or quality assurance changes throughout the duration for which this report is valid. This evaluation report does not express nor imply warranty, installation, recommended use, or other product attributes that are not specifically addressed herein.

Assemblies with Adhered Membranes over Insulated *Steel Deck* (New, Existing, or *Recover*)									
System No.	*Deck Detail*	Vapor Barrier	Base Layer Attachment	Base Layer Attachment	Top Layer	Top Layer Attachment	Membrane	Membrane Attachment	*MDP* (psf)
S-AM-63	*G33, P, L6, S24*	OPTIONAL	Min. 1-inch *Insulation*	*Preliminarily Secured* or Secured with Top Layer	Min. 0.5-inch DensDeck Prime	*#12DF* with *AFP*, *DFSP*, *RGP*, *FSP*, *SP*, or *SSP* secured *16 per 4-ft x 8-ft board*	*PVC*	*PVC BA,QLA*, or *QSA(P)*	**-67.5 (Lim. 7)**
S-AM-64	*G33, P, L6, S24*	OPTIONAL	Min. 1-inch *Insulation*	*Preliminarily Secured* or Secured with Top Layer	Min. 0.5-inch *SECUROCK*	*#12DF* with *AFP* or *FSP* secured *16 per 4-ft x 8-ft board*	*PVC*	*PVC BA, QLA*, or *QSA(P)*	**-67.5 (Lim. 7)**
S-AM-65	*G33, P, L6, S24*	OPTIONAL	Min. 1-inch *Insulation*	*Preliminarily Secured* or Secured with Top Layer	Min. 0.5-inch DensDeck Prime	*#12DF* with *AFP*, *DFSP*, *RGP*, *FSP*, *SP*, or *SSP* secured *16 per 4-ft x 8-ft board*	*PVC KEE*	*PVC BA*, or *QSA(P)*	**-67.5 (Lim. 7)**
S-AM-66	*G33, P, L6, S24*	OPTIONAL	Min. 1-inch *Insulation*	*Preliminarily Secured* or Secured with Top Layer	Min. 0.5-inch *SECUROCK*	*#12DF* with *AFP* or *FSP* secured *16 per 4-ft x 8-ft board*	*PVC KEE*	*PVC BA*, or *QSA(P)*	**-67.5 (Lim. 7)**
S-AM-67	*G33, P, L6, S24*	OPTIONAL	Min. 1-inch *Insulation*	*Preliminarily Secured* or Secured with Top Layer	Min. 0.5-inch DensDeck Prime	*#12DF* with *AFP*, *DFSP*, *RGP*, *FSP*, *SP*, or *SSP* secured *22 per 4-ft x 8-ft board*	*TPO*	*LV-50, 1121, QSA(T)* or *3SQ*	**-82.5 (Lim. 7)**
S-AM-68	*G33, P, L6, S24*	OPTIONAL	Min. 1-inch *Insulation*	*Preliminarily Secured* or Secured with Top Layer	Min. 0.5-inch *SECUROCK*	*#12DF* with *AFP* or *FSP* secured *22 per 4-ft x 8-ft board*	*TPO*	*LV-50, 1121, QSA(T)* or *3SQ*	**-82.5 (Lim. 7)**
S-AM-69	*G33, P, L6, S24*	OPTIONAL	Min. 1-inch *Insulation*	*Preliminarily Secured* or Secured with Top Layer	Min. 0.5-inch DensDeck Prime	*#12DF* with *AFP*, *DFSP*, *RGP*, *FSP*, *SP*, or *SSP* secured *22 per 4-ft x 8-ft board*	*PVC*	*PVC BA, QLA*, or *QSA(P)*	**-82.5 (Lim. 7)**
S-AM-70	*G33, P, L6, S24*	OPTIONAL	Min. 1-inch *Insulation*	*Preliminarily Secured* or Secured with Top Layer	Min. 0.5-inch *SECUROCK*	*#12DF* with *AFP* or *FSP* secured *22 per 4-ft x 8-ft board*	*PVC*	*PVC BA, QLA*, or *QSA(P)*	**-82.5 (Lim. 7)**
S-AM-71	*G33, P, L6, S24*	OPTIONAL	Min. 1-inch *Insulation*	*Preliminarily Secured* or Secured with Top Layer	Min. 0.5-inch DensDeck Prime	*#12DF* with *AFP*, *DFSP*, *RGP*, *FSP*, *SP*, or *SSP* secured *22 per 4-ft x 8-ft board*	*PVC KEE*	*PVC BA* or *QSA(P)*	**-82.5 (Lim. 7)**
S-AM-72	*G33, P, L6, S24*	OPTIONAL	Min. 1-inch *Insulation*	*Preliminarily Secured* or Secured with Top Layer	Min. 0.5-inch *SECUROCK*	*#12DF* with *AFP* or *FSP* secured *22 per 4-ft x 8-ft board*	*PVC KEE*	*PVC BA* or *QSA(P)*	**-82.5 (Lim. 7)**
S-AM-73	*G80, F1* or *HXH1, L6, S12* or *HS12*	OPTIONAL	Min. 2-inch Paratherm G or Paratherm G CG	*#12DF* with *DFSP* secured 1 fastener per 1ft^2	Min. 0.5-inch DensDeck Prime, *SECUROCK*, or Paratherm HD	*LRF-XF, OB500,* or *LRF-M* 4-inch o.c.	*TPO*	*1121, 3SQ, QSA(T),* or *LV-50*	**-105 (Lim. 7)**

This evaluation report is provided for State of Florida product approval under Rule 61G20-3. The manufacturer shall notify CREEK Technical Services, LLC of any product changes or quality assurance changes throughout the duration for which this report is valid. This evaluation report does not express nor imply warranty, installation, recommended use, or other product attributes that are not specifically addressed herein.

Assemblies with Adhered Membranes over Insulated *Steel Deck* (New, Existing, or *Recover*)									
System No.	*Deck Detail*	Vapor Barrier	Base Layer Attachment	Base Layer Attachment	Top Layer	Top Layer Attachment	Membrane	Membrane Attachment	*MDP* (psf)
S-AM-74	*G80, F1* or *HXH1, L6, S12* or *HS12*	OPTIONAL	Min. 2-inch Paratherm G or Paratherm G CG	*#12* with *SP, DFP, SSP, AFP, ARP, RGP,* or *RSP* secured 1 fastener per 1ft^2	Min. 0.5-inch DensDeck Prime, *SECUROCK,* or Paratherm HD	*LRF-XF, OB500,* or *LRF-M* 4-inch o.c.	*TPO*	*1121, 3SQ, QSA(T),* or *LV-50*	**-105 (Lim. 7)**
S-AM-75	*G80, F1* or *HXH1, L6, S12* or *HS12*	OPTIONAL	Min. 2-inch Paratherm G or Paratherm G CG	*ASAP, ASAF, ASAR,* or *HDAP* secured 1 fastener per 1ft^2	Min. 0.5-inch DensDeck Prime, *SECUROCK,* or Paratherm HD	*LRF-XF, OB500,* or *LRF-M* 4-inch o.c.	*TPO*	*1121, 3SQ, QSA(T),* or *LV-50*	**-105 (Lim. 7)**
S-AM-76	*G80, F1* or *HXH1, L6, S12* or *HS12*	OPTIONAL	Min. 2-inch Paratherm G or Paratherm G CG	*#12DF* with *DFSP* secured 1 fastener per 1ft^2	Min. 0.5-inch DensDeck Prime, *SECUROCK,* or Paratherm HD	*LRF-XF, OB500,* or *LRF-M* 4-inch o.c.	*TPO FB*	*LRF-XF, OB500,* or *LRF-M*	**-105 (Lim. 7)**
S-AM-77	*G80, F1* or *HXH1, L6, S12* or *HS12*	OPTIONAL	Min. 2-inch Paratherm G or Paratherm G CG	*#12* with *SP, DFP, SSP, AFP, ARP, RGP,* or *RSP* secured 1 fastener per 1ft^2	Min. 0.5-inch DensDeck Prime, *SECUROCK,* or Paratherm HD	*LRF-XF, OB500,* or *LRF-M* 4-inch o.c.	*TPO FB*	*LRF-XF, OB500,* or *LRF-M*	**-105 (Lim. 7)**
S-AM-78	*G80, F1* or *HXH1, L6, S12* or *HS12*	OPTIONAL	Min. 2-inch Paratherm G or Paratherm G CG	*ASAP, ASAF, ASAR,* or *HDAP* secured 1 fastener per 1ft^2	Min. 0.5-inch DensDeck Prime, *SECUROCK,* or Paratherm HD	*LRF-XF, OB500,* or *LRF-M* 4-inch o.c.	*TPO FB*	*LRF-XF, OB500,* or *LRF-M*	**-105 (Lim. 7)**
S-AM-79	*G80, F1* or *HXH1, L6, S12* or *HS12*	OPTIONAL	Min. 2-inch Paratherm G or Paratherm G CG	*#12DF* with *DFSP* secured 1 fastener per 1ft^2	Min. 0.5-inch DensDeck Prime, *SECUROCK,* or Paratherm HD	*LRF-XF, OB500,* or *LRF-M* 4-inch o.c.	*PVC* or *PVC KEE*	*PVC BA, QSA(P)*	**-105 (Lim. 7)**
S-AM-80	*G80, F1* or *HXH1, L6, S12* or *HS12*	OPTIONAL	Min. 2-inch Paratherm G or Paratherm G CG	*#12* with *SP, DFP, SSP, AFP, ARP, RGP,* or *RSP* secured 1 fastener per 1ft^2	Min. 0.5-inch DensDeck Prime, *SECUROCK,* or Paratherm HD	*LRF-XF, OB500,* or *LRF-M* 4-inch o.c.	*PVC* or *PVC KEE*	*PVC BA, QSA(P)*	**-105 (Lim. 7)**
S-AM-81	*G80, F1* or *HXH1, L6, S12* or *HS12*	OPTIONAL	Min. 2-inch Paratherm G or Paratherm G CG	*ASAP, ASAF, ASAR,* or *HDAP* secured 1 fastener per 1ft^2	Min. 0.5-inch DensDeck Prime, *SECUROCK,* or Paratherm HD	*LRF-XF, OB500,* or *LRF-M* 4-inch o.c.	*PVC* or *PVC KEE*	*PVC BA, QSA(P)*	**-105 (Lim. 7)**
S-AM-82	*G80, F1* or *HXH1, L6, S12* or *HS12*	OPTIONAL	Min. 2-inch Paratherm G or Paratherm G CG	*#12DF* with *DFSP* secured 1 fastener per 1ft^2	Min. 0.5-inch DensDeck Prime, *SECUROCK,* or Paratherm HD	*LRF-XF, OB500,* or *LRF-M* 4-inch o.c.	*PVC*	*QLA*	**-105 (Lim. 7)**

This evaluation report is provided for State of Florida product approval under Rule 61G20-3. The manufacturer shall notify CREEK Technical Services, LLC of any product changes or quality assurance changes throughout the duration for which this report is valid. This evaluation report does not express nor imply warranty, installation, recommended use, or other product attributes that are not specifically addressed herein.

Assemblies with Adhered Membranes over Insulated *Steel Deck* (New, Existing, or *Recover*)									
System No.	*Deck Detail*	Vapor Barrier	Base Layer Attachment	Base Layer Attachment	Top Layer	Top Layer Attachment	Membrane	Membrane Attachment	*MDP* (psf)
S-AM-83	*G80, F1* or *HXH1, L6, S12* or *HS12*	OPTIONAL	Min. 2-inch Paratherm G or Paratherm G CG	*#12* with *SP, DFP, SSP, AFP, ARP, RGP,* or *RSP* secured 1 fastener per 1ft^2	Min. 0.5-inch DensDeck Prime, *SECUROCK,* or Paratherm HD	*LRF-XF, OB500,* or *LRF-M* 4-inch o.c.	*PVC*	*QLA*	**-105 (Lim. 7)**
S-AM-84	*G80, F1* or *HXH1, L6, S12* or *HS12*	OPTIONAL	Min. 2-inch Paratherm G or Paratherm G CG	*ASAP, ASAF, ASAR,* or *HDAP* secured 1 fastener per 1ft^2	Min. 0.5-inch DensDeck Prime, *SECUROCK,* or Paratherm HD	*LRF-XF, OB500,* or *LRF-M* 4-inch o.c.	*PVC*	*QLA*	**-105 (Lim. 7)**
S-AM-85	*G80, F1* or *HXH1, L6, S12* or *HS12*	OPTIONAL	Min. 2-inch Paratherm G or Paratherm G CG	*#12DF* with *DFSP* secured 1 fastener per 1ft^2	Min. 0.5-inch DensDeck Prime, or Paratherm HD	*LRF-XF, OB500,* or *LRF-M* 4-inch o.c.	*PVC FB* or *PVC KEE FB*	*WBBA*	**-105 (Lim. 7)**
S-AM-86	*G80, F1* or *HXH1, L6, S12* or *HS12*	OPTIONAL	Min. 2-inch Paratherm G or Paratherm G CG	*#12* with *SP, DFP, SSP, AFP, ARP, RGP,* or *RSP* secured 1 fastener per 1ft^2	Min. 0.5-inch DensDeck Prime, or Paratherm HD	*LRF-XF, OB500,* or *LRF-M* 4-inch o.c.	*PVC FB* or *PVC KEE FB*	*WBBA*	**-105 (Lim. 7)**
S-AM-87	*G80, F1* or *HXH1, L6, S12* or *HS12*	OPTIONAL	Min. 2-inch Paratherm G or Paratherm G CG	*ASAP, ASAF, ASAR,* or *HDAP* secured 1 fastener per 1ft^2	Min. 0.5-inch DensDeck Prime, or Paratherm HD	*LRF-XF, OB500,* or *LRF-M* 4-inch o.c.	*PVC FB* or *PVC KEE FB*	*WBBA*	**-105 (Lim. 7)**
S-AM-88	*G80, F1* or *HXH1, L6, S12* or *HS12*	OPTIONAL	Min. 2-inch Paratherm G or Paratherm G CG	*#12DF* with *DFSP* secured 1 fastener per 1ft^2	Min. 0.5-inch DensDeck Prime, *SECUROCK,* or Paratherm HD	*LRF-XF, OB500,* or *LRF-M* 4-inch o.c.	*PVC FB* or *PVC KEE FB*	*LRF-XF, OB500,* or *LRF-M*	**-105 (Lim. 7)**
S-AM-89	*G80, F1* or *HXH1, L6, S12* or *HS12*	OPTIONAL	Min. 2-inch Paratherm G or Paratherm G CG	*#12* with *SP, DFP, SSP, AFP, ARP, RGP,* or *RSP* secured 1 fastener per 1ft^2	Min. 0.5-inch DensDeck Prime, *SECUROCK,* or Paratherm HD	*LRF-XF, OB500,* or *LRF-M* 4-inch o.c.	*PVC FB* or *PVC KEE FB*	*LRF-XF, OB500,* or *LRF-M*	**-105 (Lim. 7)**
S-AM-90	*G80, F1* or *HXH1, L6, S12* or *HS12*	OPTIONAL	Min. 2-inch Paratherm G or Paratherm G CG	*ASAP, ASAF, ASAR,* or *HDAP* secured 1 fastener per 1ft^2	Min. 0.5-inch DensDeck Prime, *SECUROCK,* or Paratherm HD	*LRF-XF, OB500,* or *LRF-M* 4-inch o.c.	*PVC FB* or *PVC KEE FB*	*LRF-XF, OB500,* or *LRF-M*	**-105 (Lim. 7)**
S-AM-91	*G80, F2, L6, S12*	OPTIONAL	Min. 2-inch Paratherm G or Paratherm G CG	*#12DF* with *DFSP* secured 1 fastener per 1ft^2	Min. 0.5-inch DensDeck Prime, *SECUROCK,* or Paratherm HD	*LRF-XF, OB500,* or *LRF-M* 4-inch o.c.	*TPO*	*1121, 3SQ, QSA(T),* or *LV-50*	**-150 (Lim. 7)**

This evaluation report is provided for State of Florida product approval under Rule 61G20-3. The manufacturer shall notify CREEK Technical Services, LLC of any product changes or quality assurance changes throughout the duration for which this report is valid. This evaluation report does not express nor imply warranty, installation, recommended use, or other product attributes that are not specifically addressed herein.

Assemblies with Adhered Membranes over Insulated *Steel Deck* (New, Existing, or *Recover*)									
System No.	*Deck Detail*	Vapor Barrier	Base Layer Attachment	Base Layer Attachment	Top Layer	Top Layer Attachment	Membrane	Membrane Attachment	*MDP* (psf)
S-AM-92	*G80, F2, L6, S12*	OPTIONAL	Min. 2-inch Paratherm G or Paratherm G CG	*#12* with *SP, DFP, SSP, AFP, ARP, RGP,* or *RSP* secured 1 fastener per 1ft^2	Min. 0.5-inch DensDeck Prime, *SECUROCK,* or Paratherm HD	*LRF-XF, OB500,* or *LRF-M* 4-inch o.c.	*TPO*	*1121, 3SQ, QSA(T),* or *LV-50*	**-150 (Lim. 7)**
S-AM-93	*G80, F2, L6, S12*	OPTIONAL	Min. 2-inch Paratherm G or Paratherm G CG	*ASAP, ASAF, ASAR,* or *HDAP* secured 1 fastener per 1ft^2	Min. 0.5-inch DensDeck Prime, *SECUROCK,* or Paratherm HD	*LRF-XF, OB500,* or *LRF-M* 4-inch o.c.	*TPO*	*1121, 3SQ, QSA(T),* or *LV-50*	**-150 (Lim. 7)**
S-AM-94	*G80, F2, L6, S12*	OPTIONAL	Min. 2-inch Paratherm G or Paratherm G CG	*#12DF* with *DFSP* secured 1 fastener per 1ft^2	Min. 0.5-inch DensDeck Prime, *SECUROCK,* or Paratherm HD	*LRF-XF, OB500,* or *LRF-M* 4-inch o.c.	*TPO FB*	*LRF-XF, OB500,* or *LRF-M*	**-150 (Lim. 7)**
S-AM-95	*G80, F2, L6, S12*	OPTIONAL	Min. 2-inch Paratherm G or Paratherm G CG	*#12* with *SP, DFP, SSP, AFP, ARP, RGP,* or *RSP* secured 1 fastener per 1ft^2	Min. 0.5-inch DensDeck Prime, *SECUROCK,* or Paratherm HD	*LRF-XF, OB500,* or *LRF-M* 4-inch o.c.	*TPO FB*	*LRF-XF, OB500,* or *LRF-M*	**-150 (Lim. 7)**
S-AM-96	*G80, F2, L6, S12*	OPTIONAL	Min. 2-inch Paratherm G or Paratherm G CG	*ASAP, ASAF, ASAR,* or *HDAP* secured 1 fastener per 1ft^2	Min. 0.5-inch DensDeck Prime, *SECUROCK,* or Paratherm HD	*LRF-XF, OB500,* or *LRF-M* 4-inch o.c.	*TPO FB*	*LRF-XF, OB500,* or *LRF-M*	**-150 (Lim. 7)**
S-AM-97	*G80, F2, L6, S12*	OPTIONAL	Min. 2-inch Paratherm G or Paratherm G CG	*#12DF* with *DFSP* secured 1 fastener per 1ft^2	Min. 0.5-inch DensDeck Prime, *SECUROCK,* or Paratherm HD	*LRF-XF, OB500,* or *LRF-M* 4-inch o.c.	*PVC* or *PVC KEE*	*PVC BA, QSA(P)*	**-150 (Lim. 7)**
S-AM-98	*G80, F2, L6, S12*	OPTIONAL	Min. 2-inch Paratherm G or Paratherm G CG	*#12* with *SP, DFP, SSP, AFP, ARP, RGP,* or *RSP* secured 1 fastener per 1ft^2	Min. 0.5-inch DensDeck Prime, *SECUROCK,* or Paratherm HD	*LRF-XF, OB500,* or *LRF-M* 4-inch o.c.	*PVC* or *PVC KEE*	*PVC BA, QSA(P)*	**-150 (Lim. 7)**
S-AM-99	*G80, F2, L6, S12*	OPTIONAL	Min. 2-inch Paratherm G or Paratherm G CG	*ASAP, ASAF, ASAR,* or *HDAP* secured 1 fastener per 1ft^2	Min. 0.5-inch DensDeck Prime, *SECUROCK,* or Paratherm HD	*LRF-XF, OB500,* or *LRF-M* 4-inch o.c.	*PVC* or *PVC KEE*	*PVC BA, QSA(P)*	**-150 (Lim. 7)**
S-AM-100	*G80, F2, L6, S12*	OPTIONAL	Min. 2-inch Paratherm G or Paratherm G CG	*#12DF* with *DFSP* secured 1 fastener per 1ft^2	Min. 0.5-inch DensDeck Prime, *SECUROCK,* or Paratherm HD	*LRF-XF, OB500,* or *LRF-M* 4-inch o.c.	*PVC*	*QLA*	**-150 (Lim. 7)**

This evaluation report is provided for State of Florida product approval under Rule 61G20-3. The manufacturer shall notify CREEK Technical Services, LLC of any product changes or quality assurance changes throughout the duration for which this report is valid. This evaluation report does not express nor imply warranty, installation, recommended use, or other product attributes that are not specifically addressed herein.

Assemblies with Adhered Membranes over Insulated *Steel Deck* (New, Existing, or *Recover*)									
System No.	*Deck Detail*	Vapor Barrier	Base Layer Attachment	Base Layer Attachment	Top Layer	Top Layer Attachment	Membrane	Membrane Attachment	*MDP* (psf)
S-AM-101	*G80, F2, L6, S12*	OPTIONAL	Min. 2-inch Paratherm G or Paratherm G CG	*#12* with *SP, DFP, SSP, AFP, ARP, RGP,* or *RSP* secured 1 fastener per 1ft^2	Min. 0.5-inch DensDeck Prime, *SECUROCK,* or Paratherm HD	*LRF-XF, OB500,* or *LRF-M* 4-inch o.c.	*PVC*	*QLA*	**-150 (Lim. 7)**
S-AM-102	*G80, F2, L6, S12*	OPTIONAL	Min. 2-inch Paratherm G or Paratherm G CG	*ASAP, ASAF, ASAR,* or *HDAP* secured 1 fastener per 1ft^2	Min. 0.5-inch DensDeck Prime, *SECUROCK,* or Paratherm HD	*LRF-XF, OB500,* or *LRF-M* 4-inch o.c.	*PVC*	*QLA*	**-150 (Lim. 7)**
S-AM-103	*G80, F2, L6, S12*	OPTIONAL	Min. 2-inch Paratherm G or Paratherm G CG	*#12DF* with *DFSP* secured 1 fastener per 1ft^2	Min. 0.5-inch DensDeck Prime, or Paratherm HD	*LRF-XF, OB500,* or *LRF-M* 4-inch o.c.	*PVC FB* or *PVC KEE FB*	*WBBA*	**-150 (Lim. 7)**
S-AM-104	*G80, F2, L6, S12*	OPTIONAL	Min. 2-inch Paratherm G or Paratherm G CG	*#12* with *SP, DFP, SSP, AFP, ARP, RGP,* or *RSP* secured 1 fastener per 1ft^2	Min. 0.5-inch DensDeck Prime, or Paratherm HD	*LRF-XF, OB500,* or *LRF-M* 4-inch o.c.	*PVC FB* or *PVC KEE FB*	*WBBA*	**-150 (Lim. 7)**
S-AM-105	*G80, F2, L6, S12*	OPTIO NAL	Min. 2-inch Paratherm G or Paratherm G CG	*ASAP, ASAF, ASAR,* or *HDAP* secured 1 fastener per 1ft^2	Min. 0.5-inch DensDeck Prime, or Paratherm HD	*LRF-XF, OB500,* or *LRF-M* 4-inch o.c.	*PVC FB* or *PVC KEE FB*	*WBBA*	**-150 (Lim. 7)**
S-AM-106	*G80, F2, L6, S12*	OPTIONAL	Min. 2-inch Paratherm G or Paratherm G CG	*#12DF* with *DFSP* secured 1 fastener per 1ft^2	Min. 0.5-inch DensDeck Prime, *SECUROCK,* or Paratherm HD	*LRF-XF, OB500,* or *LRF-M* 4-inch o.c.	*PVC FB* or *PVC KEE FB*	*LRF-XF, OB500,* or *LRF-M*	**-150 (Lim. 7)**
S-AM-107	*G80, F2, L6, S12*	OPTIONAL	Min. 2-inch Paratherm G or Paratherm G CG	*#12* with *SP, DFP, SSP, AFP, ARP, RGP,* or *RSP* secured 1 fastener per 1ft^2	Min. 0.5-inch DensDeck Prime, *SECUROCK,* or Paratherm HD	*LRF-XF, OB500,* or *LRF-M* 4-inch o.c.	*PVC FB* or *PVC KEE FB*	*LRF-XF, OB500,* or *LRF-M*	**-150 (Lim. 7)**
S-AM-108	*G80, F2, L6, S12*	OPTIONAL	Min. 2-inch Paratherm G or Paratherm G CG	*ASAP, ASAF, ASAR,* or *HDAP* secured 1 fastener per 1ft^2	Min. 0.5-inch DensDeck Prime, *SECUROCK,* or Paratherm HD	*LRF-XF, OB500,* or *LRF-M* 4-inch o.c.	*PVC FB* or *PVC KEE FB*	*LRF-XF, OB500,* or *LRF-M*	**-150 (Lim. 7)**
S-AM-109	*G80, F2, L5.9, S12*	OPTIONAL	Min. 2-inch Paratherm G or Paratherm G CG	*#12DF* with *DFSP* secured 1 fastener per 1ft^2	Min. 0.5-inch DensDeck Prime, *SECUROCK,* or Paratherm HD	*LRF-XF, OB500,* or *LRF-M* 4-inch o.c.	*TPO*	*1121, 3SQ, QSA(T),* or *LV-50*	**-157.5 (Lim. 7)**

This evaluation report is provided for State of Florida product approval under Rule 61G20-3. The manufacturer shall notify CREEK Technical Services, LLC of any product changes or quality assurance changes throughout the duration for which this report is valid. This evaluation report does not express nor imply warranty, installation, recommended use, or other product attributes that are not specifically addressed herein.

Assemblies with Adhered Membranes over Insulated *Steel Deck* (New, Existing, or *Recover*)									
System No.	*Deck Detail*	Vapor Barrier	Base Layer Attachment	Base Layer Attachment	Top Layer	Top Layer Attachment	Membrane	Membrane Attachment	*MDP* (psf)
S-AM-110	*G80, F2, L5.9, S12*	OPTIONAL	Min. 2-inch Paratherm G or Paratherm G CG	*#12* with *SP, DFP, SSP, AFP, ARP, RGP,* or *RSP* secured 1 fastener per 1ft^2	Min. 0.5-inch DensDeck Prime, *SECUROCK,* or Paratherm HD	*LRF-XF, OB500,* or *LRF-M* 4-inch o.c.	*TPO*	*1121, 3SQ, QSA(T),* or *LV-50*	**-157.5 (Lim. 7)**
S-AM-111	*G80, F2, L5.9, S12*	OPTIONAL	Min. 2-inch Paratherm G or Paratherm G CG	*ASAP, ASAF, ASAR,* or *HDAP* secured 1 fastener per 1ft^2	Min. 0.5-inch DensDeck Prime, *SECUROCK,* or Paratherm HD	*LRF-XF, OB500,* or *LRF-M* 4-inch o.c.	*TPO*	*1121, 3SQ, QSA(T),* or *LV-50*	**-157.5 (Lim. 7)**
S-AM-112	*G80, F2, L5.9, S12*	OPTIONAL	Min. 2-inch Paratherm G or Paratherm G CG	*#12DF* with *DFSP* secured 1 fastener per 1ft^2	Min. 0.5-inch DensDeck Prime, *SECUROCK,* or Paratherm HD	*LRF-XF, OB500,* or *LRF-M* 4-inch o.c.	*TPO FB*	*LRF-XF, OB500,* or *LRF-M*	**-157.5 (Lim. 7)**
S-AM-113	*G80, F2, L5.9, S12*	OPTIONAL	Min. 2-inch Paratherm G or Paratherm G CG	*#12* with *SP, DFP, SSP, AFP, ARP, RGP,* or *RSP* secured 1 fastener per 1ft^2	Min. 0.5-inch DensDeck Prime, *SECUROCK,* or Paratherm HD	*LRF-XF, OB500,* or *LRF-M* 4-inch o.c.	*TPO FB*	*LRF-XF, OB500,* or *LRF-M*	**-157.5 (Lim. 7)**
S-AM-114	*G80, F2, L5.9, S12*	OPTIONAL	Min. 2-inch Paratherm G or Paratherm G CG	*ASAP, ASAF, ASAR,* or *HDAP* secured 1 fastener per 1ft^2	Min. 0.5-inch DensDeck Prime, *SECUROCK,* or Paratherm HD	*LRF-XF, OB500,* or *LRF-M* 4-inch o.c.	*TPO FB*	*LRF-XF, OB500,* or *LRF-M*	**-157.5 (Lim. 7)**
S-AM-115	*G80, F2, L5.9, S12*	OPTIONAL	Min. 2-inch Paratherm G or Paratherm G CG	*#12DF* with *DFSP* secured 1 fastener per 1ft^2	Min. 0.5-inch DensDeck Prime, *SECUROCK,* or Paratherm HD	*LRF-XF, OB500,* or *LRF-M* 4-inch o.c.	*PVC* or *PVC KEE*	*PVC BA, QSA(P)*	**-157.5 (Lim. 7)**
S-AM-116	*G80, F2, L5.9, S12*	OPTIONAL	Min. 2-inch Paratherm G or Paratherm G CG	*#12* with *SP, DFP, SSP, AFP, ARP, RGP,* or *RSP* secured 1 fastener per 1ft^2	Min. 0.5-inch DensDeck Prime, *SECUROCK,* or Paratherm HD	*LRF-XF, OB500,* or *LRF-M* 4-inch o.c.	*PVC* or *PVC KEE*	*PVC BA, QSA(P)*	**-157.5 (Lim. 7)**
S-AM-117	*G80, F2, L5.9, S12*	OPTIONAL	Min. 2-inch Paratherm G or Paratherm G CG	*ASAP, ASAF, ASAR,* or *HDAP* secured 1 fastener per 1ft^2	Min. 0.5-inch DensDeck Prime, *SECUROCK,* or Paratherm HD	*LRF-XF, OB500,* or *LRF-M* 4-inch o.c.	*PVC* or *PVC KEE*	*PVC BA, QSA(P)*	**-157.5 (Lim. 7)**
S-AM-118	*G80, F2, L5.9, S12*	OPTIONAL	Min. 2-inch Paratherm G or Paratherm G CG	*#12DF* with *DFSP* secured 1 fastener per 1ft^2	Min. 0.5-inch DensDeck Prime, *SECUROCK,* or Paratherm HD	*LRF-XF, OB500,* or *LRF-M* 4-inch o.c.	*PVC*	*QLA*	**-157.5 (Lim. 7)**

This evaluation report is provided for State of Florida product approval under Rule 61G20-3. The manufacturer shall notify CREEK Technical Services, LLC of any product changes or quality assurance changes throughout the duration for which this report is valid. This evaluation report does not express nor imply warranty, installation, recommended use, or other product attributes that are not specifically addressed herein.

Assemblies with Adhered Membranes over Insulated *Steel Deck* (New, Existing, or *Recover*)									
System No.	*Deck Detail*	Vapor Barrier	Base Layer Attachment	Base Layer Attachment	Top Layer	Top Layer Attachment	Membrane	Membrane Attachment	*MDP* (psf)
S-AM-119	*G80, F2, L5.9, S12*	OPTIONAL	Min. 2-inch Paratherm G or Paratherm G CG	*#12* with *SP, DFP, SSP, AFP, ARP, RGP,* or *RSP* secured 1 fastener per 1ft^2	Min. 0.5-inch DensDeck Prime, *SECUROCK,* or Paratherm HD	*LRF-XF, OB500,* or *LRF-M* 4-inch o.c.	*PVC*	*QLA*	**-157.5 (Lim. 7)**
S-AM-120	*G80, F2, L5.9, S12*	OPTIONAL	Min. 2-inch Paratherm G or Paratherm G CG	*ASAP, ASAF, ASAR,* or *HDAP* secured 1 fastener per 1ft^2	Min. 0.5-inch DensDeck Prime, *SECUROCK,* or Paratherm HD	*LRF-XF, OB500,* or *LRF-M* 4-inch o.c.	*PVC*	*QLA*	**-157.5 (Lim. 7)**
S-AM-121	*G80, F2, L5.9, S12*	OPTIONAL	Min. 2-inch Paratherm G or Paratherm G CG	*#12DF* with *DFSP* secured 1 fastener per 1ft^2	Min. 0.5-inch DensDeck Prime, or Paratherm HD	*LRF-XF, OB500,* or *LRF-M* 4-inch o.c.	*PVC FB* or *PVC KEE FB*	*WBBA*	**-157.5 (Lim. 7)**
S-AM-122	*G80, F2, L5.9, S12*	OPTIONAL	Min. 2-inch Paratherm G or Paratherm G CG	*#12* with *SP, DFP, SSP, AFP, ARP, RGP,* or *RSP* secured 1 fastener per 1ft^2	Min. 0.5-inch DensDeck Prime, or Paratherm HD	*LRF-XF, OB500,* or *LRF-M* 4-inch o.c.	*PVC FB* or *PVC KEE FB*	*WBBA*	**-157.5 (Lim. 7)**
S-AM-123	*G80, F2, L5.9, S12*	OPTIONAL	Min. 2-inch Paratherm G or Paratherm G CG	*ASAP, ASAF, ASAR,* or *HDAP* secured 1 fastener per 1ft^2	Min. 0.5-inch DensDeck Prime, or Paratherm HD	*LRF-XF, OB500,* or *LRF-M* 4-inch o.c.	*PVC FB* or *PVC KEE FB*	*WBBA*	**-157.5 (Lim. 7)**
S-AM-124	*G80, F2, L5.9, S12*	OPTIONAL	Min. 2-inch Paratherm G or Paratherm G CG	*#12DF* with *DFSP* secured 1 fastener per 1ft^2	Min. 0.5-inch DensDeck Prime, *SECUROCK,* or Paratherm HD	*LRF-XF, OB500,* or *LRF-M* 4-inch o.c.	*PVC FB* or *PVC KEE FB*	*LRF-XF, OB500,* or *LRF-M*	**-157.5 (Lim. 7)**
S-AM-125	*G80, F2, L5.9, S12*	OPTIONAL	Min. 2-inch Paratherm G or Paratherm G CG	*#12* with *SP, DFP, SSP, AFP, ARP, RGP,* or *RSP* secured 1 fastener per 1ft^2	Min. 0.5-inch DensDeck Prime, *SECUROCK,* or Paratherm HD	*LRF-XF, OB500,* or *LRF-M* 4-inch o.c.	*PVC FB* or *PVC KEE FB*	*LRF-XF, OB500,* or *LRF-M*	**-157.5 (Lim. 7)**
S-AM-126	*G80, F2, L5.9, S12*	OPTIONAL	Min. 2-inch Paratherm G or Paratherm G CG	*ASAP, ASAF, ASAR,* or *HDAP* secured 1 fastener per 1ft^2	Min. 0.5-inch DensDeck Prime, *SECUROCK,* or Paratherm HD	*LRF-XF, OB500,* or *LRF-M* 4-inch o.c.	*PVC FB* or *PVC KEE FB*	*LRF-XF, OB500,* or *LRF-M*	**-157.5 (Lim. 7)**

This evaluation report is provided for State of Florida product approval under Rule 61G20-3. The manufacturer shall notify CREEK Technical Services, LLC of any product changes or quality assurance changes throughout the duration for which this report is valid. This evaluation report does not express nor imply warranty, installation, recommended use, or other product attributes that are not specifically addressed herein.

Hybrid Assemblies with Adhered Membranes over Insulated *Steel Deck* (New, Existing, or *Recover*)									
System No.	*Deck Detail*	Vapor Barrier	Base Layer	Base Layer Attachment	Top Layer	Top Layer Attachment	Base Ply	Membrane	*MDP* (psf)
S-AM-H1	*G33*	OPTIONAL	Min. 2-inch Paratherm G or Paratherm G CG	*#12DF* with *DFSP* secured 1 fastener per 5.33ft^2	*SECUROCK*	Hot Asphalt	*PLY HA1*	*TPO FB, PVC FB,* or *PVC KEE FB* adhered in *LRF-M, LRF-XF,* or *OB500*	**-45 (Lim. 9)**
S-AM-H2	*G33*	OPTIONAL	Min. 2-inch Paratherm G or Paratherm G CG	*#12* with *SP, FSP, SSP, AFP, ARP, RGP,* or *RSP* secured 1 fastener per 5.33ft^2	*SECUROCK*	Hot Asphalt	*PLY HA1*	*TPO FB, PVC FB,* or *PVC KEE FB* adhered in *LRF-M, LRF-XF,* or *OB500*	**-45 (Lim. 9)**
S-AM-H3	*G33*	OPTIONAL	Min. 2-inch Paratherm G or Paratherm G CG	*ASAF, ASAP, ASAR,* or *HHAP* secured 1 fastener per 5.33ft^2	*SECUROCK*	Hot Asphalt	*PLY HA1*	*TPO FB, PVC FB,* or *PVC KEE FB* adhered in *LRF-M, LRF-XF,* or *OB500*	**-45 (Lim. 9)**
S-AM-H4	*G33, F1* or *HXH1, L6, S24* or *HS24*	OPTIONAL	Min. 1.5-inch Paratherm G or Paratherm G CG	*#12DF* with *DFSP* secured 1 fastener per 1.33ft^2	*Structodek*	Hot Asphalt	*PLY HA1*	*TPO FB, PVC FB,* or *PVC KEE FB* adhered in *LRF-M, LRF-XF,* or *OB500*	**-60 (Lim. 7)**
S-AM-H5	*G33, F1* or *HXH1, L6, S24* or *HS24*	OPTIONAL	Min. 1.5-inch Paratherm G or Paratherm G CG	*#12* with *SP, FSP, SSP, AFP, ARP, RGP,* or *RSP* secured 1 fastener per 1.33ft^2	*Structodek*	Hot Asphalt	*PLY HA1*	*TPO FB, PVC FB,* or *PVC KEE FB* adhered in *LRF-M, LRF-XF,* or *OB500*	**-60 (Lim. 7)**
S-AM-H6	*G33, F1* or *HXH1, L6, S24* or *HS24*	OPTIONAL	Min. 1.5-inch Paratherm G or Paratherm G CG	*ASAF, ASAP, ASAR,* or *HHAP* secured 1 fastener per 1.33ft^2	*Structodek*	Hot Asphalt	*PLY HA1*	*TPO FB, PVC FB,* or *PVC KEE FB* adhered in *LRF-M, LRF-XF,* or *OB500*	**-60 (Lim. 7)**
S-AM-H7	*G33, F1* or *HXH1, L6, S24* or *HS24*	OPTIONAL	Min. 2-inch Paratherm G or Paratherm G CG	*#12DF* with *DFSP* secured 1 fastener per 1.78ft^2	*SECUROCK*	Hot Asphalt	*PLY HA1*	*TPO FB, PVC FB,* or *PVC KEE FB* adhered in *LRF-M, LRF-XF,* or *OB500*	**-67.5 (Lim. 7)**
S-AM-H8	*G33, F1* or *HXH1, L6, S24* or *HS24*	OPTIONAL	Min. 2-inch Paratherm G or Paratherm G CG	*#12* with *SP, FSP, SSP, AFP, ARP, RGP,* or *RSP* secured 1 fastener per 1.78ft^2	*SECUROCK*	Hot Asphalt	*PLY HA1*	*TPO FB, PVC FB,* or *PVC KEE FB* adhered in *LRF-M, LRF-XF,* or *OB500*	**-67.5 (Lim. 7)**

This evaluation report is provided for State of Florida product approval under Rule 61G20-3. The manufacturer shall notify CREEK Technical Services, LLC of any product changes or quality assurance changes throughout the duration for which this report is valid. This evaluation report does not express nor imply warranty, installation, recommended use, or other product attributes that are not specifically addressed herein.

Hybrid Assemblies with Adhered Membranes over Insulated *Steel Deck* (New, Existing, or *Recover*)									
System No.	*Deck Detail*	Vapor Barrier	Base Layer	Base Layer Attachment	Top Layer	Top Layer Attachment	Base Ply	Membrane	*MDP* (psf)
S-AM-H9	*G33, F1* or *HXH1, L6, S24* or *HS24*	OPTIONAL	Min. 2-inch Paratherm G or Paratherm G CG	*ASAF, ASAP, ASAR,* or *HHAP* secured 1 fastener per 1.78ft^2	*SECUROCK*	Hot Asphalt	*PLY HA1*	*TPO FB, PVC FB,* or *PVC KEE FB* adhered in *LRF-M, LRF-XF,* or *OB500*	**-67.5 (Lim. 7)**
S-AM-H10	*G33, F1* or *HXH1, L6, S24* or *HS24*	OPTIONAL	Min. 2-inch Paratherm G or Paratherm G CG	*#12DF* with *DFSP* secured 1 fastener per 1.6ft^2	-	-	*PLY HA1*	*TPO FB, PVC FB,* or *PVC KEE FB* adhered in *LRF-M, LRF-XF,* or *OB500*	**-75 (Lim. 7)**
S-AM-H11	*G33, F1* or *HXH1, L6, S24* or *HS24*	OPTIONAL	Min. 2-inch Paratherm G or Paratherm G CG	*#12* with *SP, FSP, SSP, AFP, ARP, RGP,* or *RSP* secured 1 fastener per 1.6ft^2	-	-	*PLY HA1*	*TPO FB, PVC FB,* or *PVC KEE FB* adhered in *LRF-M, LRF-XF,* or *OB500*	**-75 (Lim. 7)**
S-AM-H12	*G33, F1* or *HXH1, L6, S24* or *HS24*	OPTIONAL	Min. 2-inch Paratherm G or Paratherm G CG	*ASAF, ASAP, ASAR,* or *HHAP* secured 1 fastener per 1.6ft^2	-	-	*PLY HA1*	*TPO FB, PVC FB,* or *PVC KEE FB* adhered in *LRF-M, LRF-XF,* or *OB500*	**-75 (Lim. 7)**
S-AM-H13	*G33, F1* or *HXH1, L6, S24* or *HS24*	OPTIONAL	Min. 2-inch Paratherm G or Paratherm G CG	*#12DF* with *DFSP* secured 1 fastener per 1.45ft^2	-	-	*PLY HA1*	*TPO FB, PVC FB,* or *PVC KEE FB* adhered in *LRF-M, LRF-XF,* or *OB500*	**-82.5 (Lim. 7)**
S-AM-H14	*G33, F1* or *HXH1, L6, S24* or *HS24*	OPTIONAL	Min. 2-inch Paratherm G or Paratherm G CG	*#12* with *SP, FSP, SSP, AFP, ARP, RGP,* or *RSP* secured 1 fastener per 1.45ft^2	-	-	*PLY HA1*	*TPO FB, PVC FB,* or *PVC KEE FB* adhered in *LRF-M, LRF-XF,* or *OB500*	**-82.5 (Lim. 7)**
S-AM-H15	*G33, F1* or *HXH1, L6, S24* or *HS24*	OPTIONAL	Min. 2-inch Paratherm G or Paratherm G CG	*ASAF, ASAP, ASAR,* or *HHAP* secured 1 fastener per 1.45ft^2	-	-	*PLY HA1*	*TPO FB, PVC FB,* or *PVC KEE FB* adhered in *LRF-M, LRF-XF,* or *OB500*	**-82.5 (Lim. 7)**
S-AM-H16	*G40, F1* or *HXH1, L6, S24* or *HS24*	OPTIONAL	Min. 2-inch Paratherm G or Paratherm G CG	*#12DF* with *DFSP* secured 1 fastener per 1.6ft^2	-	-	*PLY HA1*	*TPO FB, PVC FB,* or *PVC KEE FB* adhered in *LRF-M, LRF-XF,* or *OB500*	**-90 (Lim. 7)**

This evaluation report is provided for State of Florida product approval under Rule 61G20-3. The manufacturer shall notify CREEK Technical Services, LLC of any product changes or quality assurance changes throughout the duration for which this report is valid. This evaluation report does not express nor imply warranty, installation, recommended use, or other product attributes that are not specifically addressed herein.

Hybrid Assemblies with Adhered Membranes over Insulated *Steel Deck* (New, Existing, or *Recover*)									
System No.	*Deck Detail*	Vapor Barrier	Base Layer	Base Layer Attachment	Top Layer	Top Layer Attachment	Base Ply	Membrane	*MDP* (psf)
S-AM-H17	*G40, F1* or *HXH1, L6, S24* or *HS24*	OPTIONAL	Min. 2-inch Paratherm G or Paratherm G CG	*#12* with *SP, FSP, SSP, AFP, ARP, RGP,* or *RSP* secured 1 fastener per 1.6ft^2	-	-	*PLY HA1*	*TPO FB, PVC FB,* or *PVC KEE FB* adhered in *LRF-M, LRF-XF,* or *OB500*	**-90 (Lim. 7)**
S-AM-H18	*G40, F1* or *HXH1, L6, S24* or *HS24*	OPTIONAL	Min. 2-inch Paratherm G or Paratherm G CG	*ASAF, ASAP, ASAR,* or *HHAP* secured 1 fastener per 1.6ft^2	-	-	*PLY HA1*	*TPO FB, PVC FB,* or *PVC KEE FB* adhered in *LRF-M, LRF-XF,* or *OB500*	**-90 (Lim. 7)**
S-AM-H19	*G80, F1* or *HXH1, L6, S24* or *HS24*	OPTIONAL	Min. 2-inch Paratherm G or Paratherm G CG	*#12DF* with *DFSP* secured 1 fastener per 1ft^2	-	-	*PLY HA1*	*TPO FB* adhered in *LRF-M, LRF-XF,* or *OB500*	**-97.5 (Lim. 7)**
S-AM-H20	*G80, F1* or *HXH1, L6, S24* or *HS24*	OPTIONAL	Min. 2-inch Paratherm G or Paratherm G CG	*#12* with *SP, FSP, SSP, AFP, ARP, RGP,* or *RSP* secured 1 fastener per 1ft^2	-	-	*PLY HA1*	*TPO FB* adhered in *LRF-M, LRF-XF,* or *OB500*	**-97.5 (Lim. 7)**
S-AM-H21	*G80, F1* or *HXH1, L6, S24* or *HS24*	OPTIONAL	Min. 2-inch Paratherm G or Paratherm G CG	*ASAF, ASAP, ASAR,* or *HHAP* secured 1 fastener per 1ft^2	-	-	*PLY HA1*	*TPO FB* adhered in *LRF-M, LRF-XF,* or *OB500*	**-97.5 (Lim. 7)**
S-AM-H22	*G40, F2* or *HXH2, L6, S12* or *HS12*	OPTIONAL	Min. 2-inch Paratherm G or Paratherm G CG	*#12DF* with *DFSP* secured 1 fastener per 1ft^2	-	-	*PLY HA1*	*TPO FB* adhered in *LRF-M, LRF-XF,* or *OB500*	**-97.5 (Lim. 7)**
S-AM-H23	*G40, F2* or *HXH2, L6, S12* or *HS12*	OPTIONAL	Min. 2-inch Paratherm G or Paratherm G CG	*#12* with *SP, FSP, SSP, AFP, ARP, RGP,* or *RSP* secured 1 fastener per 1ft^2	-	-	*PLY HA1*	*TPO FB* adhered in *LRF-M, LRF-XF,* or *OB500*	**-97.5 (Lim. 7)**
S-AM-H24	*G40, F2* or *HXH2, L6, S12* or *HS12*	OPTIONAL	Min. 2-inch Paratherm G or Paratherm G CG	*ASAF, ASAP, ASAR,* or *HHAP* secured 1 fastener per 1ft^2	-	-	*PLY HA1*	*TP TPO FB* adhered in *LRF-M, LRF-XF,* or *OB500*	**-97.5 (Lim. 7)**
S-AM-H25	*G80, F1* or *HXH1, L6, S24* or *HS24*	OPTIONAL	Min. 2-inch Paratherm G or Paratherm G CG	*#12DF* with *DFSP* secured 1 fastener per 1ft^2	-	-	Paratech Glass Base adhered in *HA*	*TPO FB* adhered in *LRF-M, LRF-XF,* or *OB500*	**-105 (Lim. 7)**
S-AM-H26	*G80, F1* or *HXH1, L6, S24* or *HS24*	OPTIONAL	Min. 2-inch Paratherm G or Paratherm G CG	*#12* with *SP, FSP, SSP, AFP, ARP, RGP,* or *RSP* secured 1 fastener per 1ft^2	-	-	Paratech Glass Base adhered in *HA*	*TPO FB* adhered in *LRF-M, LRF-XF,* or *OB500*	**-105 (Lim. 7)**

This evaluation report is provided for State of Florida product approval under Rule 61G20-3. The manufacturer shall notify CREEK Technical Services, LLC of any product changes or quality assurance changes throughout the duration for which this report is valid. This evaluation report does not express nor imply warranty, installation, recommended use, or other product attributes that are not specifically addressed herein.

Hybrid Assemblies with Adhered Membranes over Insulated *Steel Deck* (New, Existing, or *Recover*)									
System No.	*Deck Detail*	Vapor Barrier	Base Layer	Base Layer Attachment	Top Layer	Top Layer Attachment	Base Ply	Membrane	*MDP* (psf)
S-AM-H27	*G80, F1* or *HXH1, L6, S24* or *HS24*	OPTIONAL	Min. 2-inch Paratherm G or Paratherm G CG	*ASAF, ASAP, ASAR,* or *HHAP* secured 1 fastener per 1ft^2	-	-	Paratech Glass Base adhered in *HA*	*TPO FB* adhered in *LRF-M, LRF-XF,* or *OB500*	**-105 (Lim. 7)**
S-AM-H28	*G45, F2* or *HXH2, L6, S12* or *HS12*	OPTIONAL	Min. 2-inch Paratherm G or Paratherm G CG	*#12DF* with *DFSP* secured 1 fastener per 1ft^2	-	-	Paratech Glass Base adhered in *HA*	*TPO FB* adhered in *LRF-M, LRF-XF,* or *OB500*	**-105 (Lim. 7)**
S-AM-H29	*G45, F2* or *HXH2, L6, S12* or *HS12*	OPTIONAL	Min. 2-inch Paratherm G or Paratherm G CG	*#12* with *SP, FSP, SSP, AFP, ARP, RGP,* or *RSP* secured 1 fastener per 1ft^2	-	-	Paratech Glass Base adhered in *HA*	*TPO FB* adhered in *LRF-M, LRF-XF,* or *OB500*	**-105 (Lim. 7)**
S-AM-H30	*G45, F2* or *HXH2, L6, S12* or *HS12*	OPTIONAL	Min. 2-inch Paratherm G or Paratherm G CG	*ASAF, ASAP, ASAR,* or *HHAP* secured 1 fastener per 1ft^2	-	-	Paratech Glass Base adhered in *HA*	*TPO FB* adhered in *LRF-M, LRF-XF,* or *OB500*	**-105 (Lim. 7)**

Mechanically Fastened Assemblies over *Steel Deck* (New, Existing, or *Recover*)									
System No.	*Deck Detail*	Vapor Barrier	Base Layer	Base Layer Attachment	Top Layer	Top Layer Attachment	Membrane	Membrane Attachment	*MDP* (psf)
S-M-1	*G33, L6*	OPTIONAL	Min. 1.5-inch *Insulation*	*Preliminarily Secured* or Secured with Top Layer	OPTIONAL *Separator Sheet*	*Preliminarily Secured*	*TPO* or Min. 60mil *TPO FB* (120-inch wide)	Attached in-lap 12-inch o.c. with *XHD & XHD 2-3/8" Plate;* Side laps spaced 114-inch o.c.	**-30 (Lim. 7; Non-HVHZ)**
S-M-2	*G33, HXH1, L6, HS6*	OPTIONAL	Min. 1-inch *Insulation*	*Preliminarily Secured* or Secured with Top Layer	OPTIONAL *Separator Sheet*	*Preliminarily Secured*	*TPO* or Min. 60mil *TPO FB* (72-inch wide)	Attached in-lap 12-inch o.c. with *XHD & XHD 2" Plate;* Side laps spaced 66-inch o.c.	**-45 (Lim. 7)**
S-M-3	*G80, HXH1, L5, HS24*	OPTIONAL	Min. 1-inch *Insulation*	*Preliminarily Secured* or Secured with Top Layer	OPTIONAL *Separator Sheet*	*Preliminarily Secured*	*TPO* or Min. 60mil *TPO FB* (144-inch wide)	Attached in-lap 6-inch o.c. with *XHD & XHD 2" Plate;* Side laps spaced 138-inch o.c.	**-45 (Lim. 7)**
S-M-4	*G80, HXH1* or *F1, L6, HS24* or *S24*	OPTIONAL	Min. 1-inch *Insulation*	*Preliminarily Secured* or Secured with Top Layer	OPTIONAL *Separator Sheet*	*Preliminarily Secured*	Min. 60mil *TPO* or *TPO FB* (96-inch wide)	Attached in-lap 12-inch o.c. with *EHD & DXHD;* Side laps spaced 90-inch o.c.	**-45 (Lim. 7)**
S-M-5	*G33, HXH1* or *F1, L6, HS24* or *S24*	OPTIONAL	Min. 1.5-inch *Insulation*	*Preliminarily Secured* or Secured with Top Layer	OPTIONAL *Separator Sheet* or *Insulation*	*Preliminarily Secured*	Min. 60mil *TPO* (72-inch wide)	Attached in-lap 12-inch o.c. with *EHD & DXHD;* Side laps spaced 66-inch o.c.	**-45 (Lim. 7)**

This evaluation report is provided for State of Florida product approval under Rule 61G20-3. The manufacturer shall notify CREEK Technical Services, LLC of any product changes or quality assurance changes throughout the duration for which this report is valid. This evaluation report does not express nor imply warranty, installation, recommended use, or other product attributes that are not specifically addressed herein.

Mechanically Fastened Assemblies over *Steel Deck* (New, Existing, or *Recover*)

System No.	*Deck Detail*	Vapor Barrier	Base Layer	Base Layer Attachment	Top Layer	Top Layer Attachment	Membrane	Membrane Attachment	*MDP* (psf)
S-M-6	*G33, HXH1, L6, HS24*	OPTIONAL	Min. 1-inch *Insulation*	*Preliminarily Secured* or Secured with Top Layer	OPTIONAL *Separator Sheet*	*Preliminarily Secured*	*TPO* or Min. 60mil *TPO FB* (60-inch wide)	Attached in-lap 12-inch o.c. with *XHD & XHD 2" Plate;* Side laps spaced 54-inch o.c.	**-52.5 (Lim. 7)**
S-M-7	*G33, HXH1, L6, HS24*	OPTIONAL	Min. 1-inch *Insulation*	*Preliminarily Secured* or Secured with Top Layer	OPTIONAL *Separator Sheet*	*Preliminarily Secured*	*TPO* or Min. 60mil *TPO FB* (72-inch wide)	Attached in-lap 12-inch o.c. with *XHD & SXHD Plate;* Side laps spaced 66-inch o.c.	**-52.5 (Lim. 7)**
S-M-8	*G33, L6, F1, S24*	OPTIONAL	Min. 1.5-inch *Insulation*	*Preliminarily Secured* or Secured with Top Layer	OPTIONAL *Separator Sheet*	*Preliminarily Secured*	*TPO* or Min. 60mil *TPO FB* (120-inch wide)	Attached in-lap 6-inch o.c. with *XHD & XHD 2-3/8" Plate* or *XHD 2" Plate;* Side laps spaced 114-inch o.c.	**-52.5 (Lim. 7)**
S-M-9	*G33, HXH1, L6, HS24*	OPTIONAL	Min. 1-inch *Insulation*	*Preliminarily Secured* or Secured with Top Layer	OPTIONAL *Separator Sheet*	*Preliminarily Secured*	*TPO* or Min. 60mil *TPO FB* (60-inch wide)	Attached in-lap 12-inch o.c. with *XHD & SXHD Plate;* Side laps spaced 54-inch o.c.	**-60 (Lim. 7)**
S-M-10	*G33, P, L6, S24*	OPTIONAL	Min. 1.5-inch *Insulation*	*Preliminarily Secured* or Secured with Top Layer	OPTIONAL *Separator Sheet*	*Preliminarily Secured*	Min. 60mil *TPO* (144-inch wide)	Attached in-lap 6-inch o.c. with *XHD & XHD 2" Plate;* Side laps spaced 138-inch o.c.	**-60 (Lim. 7)**
S-M-11	*G33, P, L6, S24*	OPTIONAL	Min. 1-inch *Insulation*	*Preliminarily Secured* or Secured with Top Layer	OPTIONAL *Separator Sheet*	*Preliminarily Secured*	*TPO* or Min. 60mil *TPO FB* (120-inch wide)	Attached in-lap 6-inch o.c. with *XHD & SXHD Plate;* Side laps spaced 114-inch o.c.	**-67.5 (Lim. 7)**
S-M-12	*G33, P, L6, S12*	OPTIONAL	Min. 1-inch *Insulation*	*Preliminarily Secured* or Secured with Top Layer	OPTIONAL *Separator Sheet*	*Preliminarily Secured*	Min. 60mil *TPO* or *TPO FB* (144-inch wide)	Attached 6-inch o.c. through 6-inch wide overlaps with *XHD & XHD 2-3/8" Plate* spaced 138-inch o.c.; 8-inch wide cover strip attached over plates and sealed with a 1.5-inch wide heat weld on each side	**-67.5 (Lim. 7)**
S-M-13	*G33, P, L6, S12*	OPTIONAL	Min. 1.5-inch *Insulation*	*Preliminarily Secured* or Secured with Top Layer	OPTIONAL *Separator Sheet*	*Preliminarily Secured*	Min. 60mil *TPO* or *TPO FB* (144-inch wide)	Attached in-lap 6-inch o.c. with *XHD & XHD 2" Plate;* Side laps spaced 66-inch o.c.	**-82.5 (Lim. 7)**

Induction Welded Assemblies over *Steel Deck* (New, Existing, or *Recover*)

System No.	*Deck Detail*	Vapor Barrier	Base Layer	Base Layer Attachment	Top Layer	Top Layer Attachment	Membrane	Membrane Attachment	*MDP* (psf)
S-W-1	*G33, P L6,S12*	OPTIONAL	Min. 2-inch *Insulation*	*Preliminarily Secured* or secured with top layer	OPTIONAL *Cover Board*	*RhinoBond* fastened in a *18-inch x 24-inch staggered grid*	*TPO*	Induction welded to *RhinoBond* plates	**-82.5 (Lim. 7)**

This evaluation report is provided for State of Florida product approval under Rule 61G20-3. The manufacturer shall notify CREEK Technical Services, LLC of any product changes or quality assurance changes throughout the duration for which this report is valid. This evaluation report does not express nor imply warranty, installation, recommended use, or other product attributes that are not specifically addressed herein.

Induction Welded Assemblies over *Steel Deck* (New, Existing, or *Recover*)									
System No.	*Deck Detail*	Vapor Barrier	Base Layer	Base Layer Attachment	Top Layer	Top Layer Attachment	Membrane	Membrane Attachment	*MDP* (psf)
S-W-2	*G33, HXH1, L6, HS24*	OPTIONAL	Min. 2-inch *Insulation*	*Preliminarily Secured* or secured with top layer	OPTIONAL *Cover Board*	*RhinoBond* fastened 1 per 2.7ft^2 (18-inch x 24-inch grid)	*TPO*	Induction welded to *RhinoBond* plates	**-82.5 (Lim. 7)**
S-W-3	*G33, P L6,S24*	OPTIONAL	Min. 2-inch *Insulation*	*Preliminarily Secured* or secured with top layer	OPTIONAL *Cover Board*	*RhinoBond* fastened in a *16-inch x 18-inch staggered grid*	*TPO*	Induction welded to *RhinoBond* plates	**-105 (Lim. 7)**

Mechanically Fastened Assemblies over *Wood Deck* (New, Existing, or *Recover*)									
System No.	*Deck Detail*	Vapor Barrier	Base Layer	Base Layer Attachment	Top Layer	Top Layer Attachment	Membrane	Membrane Attachment	*MDP* (psf)
W-M-1	*T19/32P, L24, N6*	OPTIONAL	Min. 1-inch *Insulation*	*Preliminarily Secured* or Secured with Top Layer	OPTIONAL *Separator Sheet*	*Preliminarily Secured*	*TPO or* Min. 60mil *TPO FB*	Attached in-lap 6-inch o.c. with *XHD & XHD 2" Plate;* Side laps spaced 114.5-inch o.c.; Min. 1.75-inch wide heat weld	**-45 (Lim. 7)**
W-M-2	*T19/32O, L24, N6*	OPTIONAL	OPTIONAL Min. 1-inch *Insulation*	*Preliminarily Secured* or Secured with Top Layer	OPTIONAL *Separator Sheet*	*Preliminarily Secured*	*TPO or* Min. 60mil *TPO FB*	Attached in-lap 6-inch o.c. with *XHD & XHD 2-3/8" Plate;* Side laps spaced 54-inch o.c.	**-45 (Lim. 7; Non-HVHZ)**
W-M-3	*T19/32P, L24, N6*	OPTIONAL	Min. 1.5-inch *Insulation*	*Preliminarily Secured* or Secured with Top Layer	OPTIONAL *Separator Sheet*	*Preliminarily Secured*	*TPO or* Min. 60mil *TPO FB*	Attached in-lap 6-inch o.c. with *#14HD & XHD 2" Plate;* Side laps spaced 55-inch o.c.; Min. 1.75-inch wide heat weld	**-52.5 (Lim. 7)**
W-M-4	*T15/32P, L24, N6*	OPTIONAL	OPTIONAL Min. 1-inch *Insulation*	*Preliminarily Secured* or Secured with Top Layer	OPTIONAL *Separator Sheet*	*Preliminarily Secured*	*TPO or* Min. 60mil *TPO FB*	Attached in-lap 12-inch o.c. with *#14 & XHD 2" Plate;* Fasteners secured through the deck into trusses/rafters minimum 1-inch; Side laps spaced 48-inch o.c.	**-52.5 (Lim. 7)**
W-M-5	*T15/32P, L24, N6*	OPTIONAL	-	-	OPTIONAL *Separator Sheet*	*Preliminarily Secured*	*TPO or* Min. 60mil *TPO FB*	Attached in-lap 6-inch o.c. with *#14 & XHD 2" Plate;* Fasteners secured through the deck into trusses/rafters minimum 1-inch; Side laps spaced 48-inch o.c.	**-67.5 (Lim. 7)**

This evaluation report is provided for State of Florida product approval under Rule 61G20-3. The manufacturer shall notify CREEK Technical Services, LLC of any product changes or quality assurance changes throughout the duration for which this report is valid. This evaluation report does not express nor imply warranty, installation, recommended use, or other product attributes that are not specifically addressed herein.

Mechanically Fastened Assemblies over *Wood Deck* (New, Existing, or *Recover*)									
System No.	*Deck Detail*	Vapor Barrier	Base Layer	Base Layer Attachment	Top Layer	Top Layer Attachment	Membrane	Membrane Attachment	*MDP* (psf)
W-M-6	*T15/32P, L24, N6*	OPTIONAL	OPTIONAL Min. 1-inch *Insulation*	*Preliminarily Secured* or Secured with Top Layer	OPTIONAL *Separator Sheet*	*Preliminarily Secured*	*TPO or* Min. 60mil *TPO FB*	Attached in-lap 12-inch o.c. with *#14 & SXHD Plate;* Fasteners secured through the deck into trusses/rafters minimum 1-inch*;* Side laps spaced 48-inch o.c.	**-67.5 (Lim. 7)**

END OF REPORT

This evaluation report is provided for State of Florida product approval under Rule 61G20-3. The manufacturer shall notify CREEK Technical Services, LLC of any product changes or quality assurance changes throughout the duration for which this report is valid. This evaluation report does not express nor imply warranty, installation, recommended use, or other product attributes that are not specifically addressed herein.